Undercarriage

Undercarriage systems

Standard
PLUS
HD-AIR
AR
Dual bushing
General construction
Civil engineering

Komatsu undercarriage

Undercarriage specialist

Komatsu is a leading undercarriage manufacturer and developer, committed to provide cost effective solutions.

As an Original Equipment Manufacturer (OEM), we understand the importance of your undercarriage investment, which can represent up to 50 percent of a machine's maintenance expenses.

Tailor-fitted to your Komatsu dozer or excavator – and to your needs and expectations, our undercarriage parts optimize the performance of Komatsu equipment and reduce your operating costs.

Undercarriage options

Greased Sealed Track (GST) – for excavators

With a simple yet highly effective design, the Komatsu GST undercarriages use high performance grease to lubricate pins and bushings, and reduce internal wear. Their steel is optimally hardened during manufacturing, to ensure a longer lifetime and maximum reliability.

Sealed And Lubricated Tracks (SALT) – for bulldozers

Komatsu SALT undercarriages feature lubricating oil between pins and bushings, as well as unique high performance seals that minimize the risk of link pitch extension and maximize wear life. You can choose from a wide variety of SALT undercarriages tailored to fit different applications.

	GST			SALT					
Model	Standard	GC	CE	Standard	PLUS	GC PLUS	AR	HD-AIR	Dual Bushing
All excavators	●								
PC200	●		●						
PC300	●	●							
PC400	●	●							
D37				●	●				
D41				●	●				
D51				●	●				
D61				●	●		●		
D65				●	●		●	●	
D71				●	●		●	●	
D85					●			●	
D155				●	●				
D175				●	●				
D275				●					●
D375				●					●
D475				●					●

PLUS (Parallel Link Undercarriage System)

Developed for mid-size bulldozers (D37, D51, D61, D65, D85, D155), the PLUS undercarriage is ideal for any application – no matter the level of impact and abrasion. Its main feature is a unique rotating bushing that minimizes wear between itself and the sprocket. All other PLUS components are different from those on a standard undercarriage, and were redesigned to last up to twice as long. *

Standard track

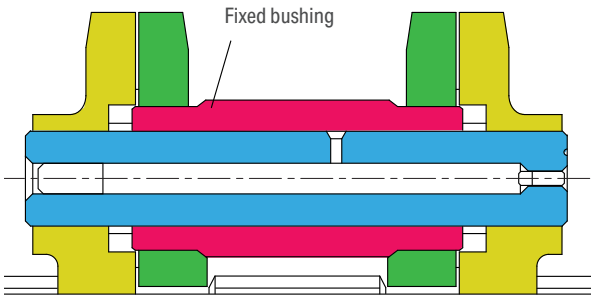

PLUS

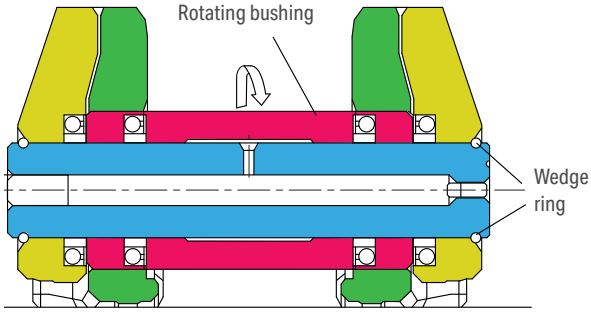

PLUS vs. Standard track

Key differences	Key benefits
Bushing rotates around the pin.	Less wear for bushings and sprockets – Longer track life.
Unique Komatsu-designed seals.	Reduced risk of leakage – Lower service costs – Longer undercarriage life.
Recessed sprocket segments, with a slot on their side face for easier disposal of dirt and mud.	Less material packing – Lower track tension and pressure on seals – Longer sprocket and track life.
Bigger and parallel links, with track shoes redesigned to fit them.	Longer undercarriage life.
Wedge ring inserted between link and pin – Less press fitting force needed for track assembly.	Easier replacement of accidentally damaged link assembly parts – Lower service costs.
Track rollers with higher flanges.	Improved track guidance and longer track roller life.
Carrier rollers with a bigger diameter and a deeper hardened tread surface.	Longer life for carrier rollers.
New track guard design.	Better protection of the undercarriage.

Note: For the available retrofit conversion upgrade from standard undercarriage up to PLUS, the following parts must be replaced: track link assembly, shoes, shoe bolts & nuts, sprocket segments, track rollers, carrier rollers and track guards (if equipped).

* Wear life can vary based upon machine application/operation, ground foot conditions and lack of UC maintenance

Undercarriage systems

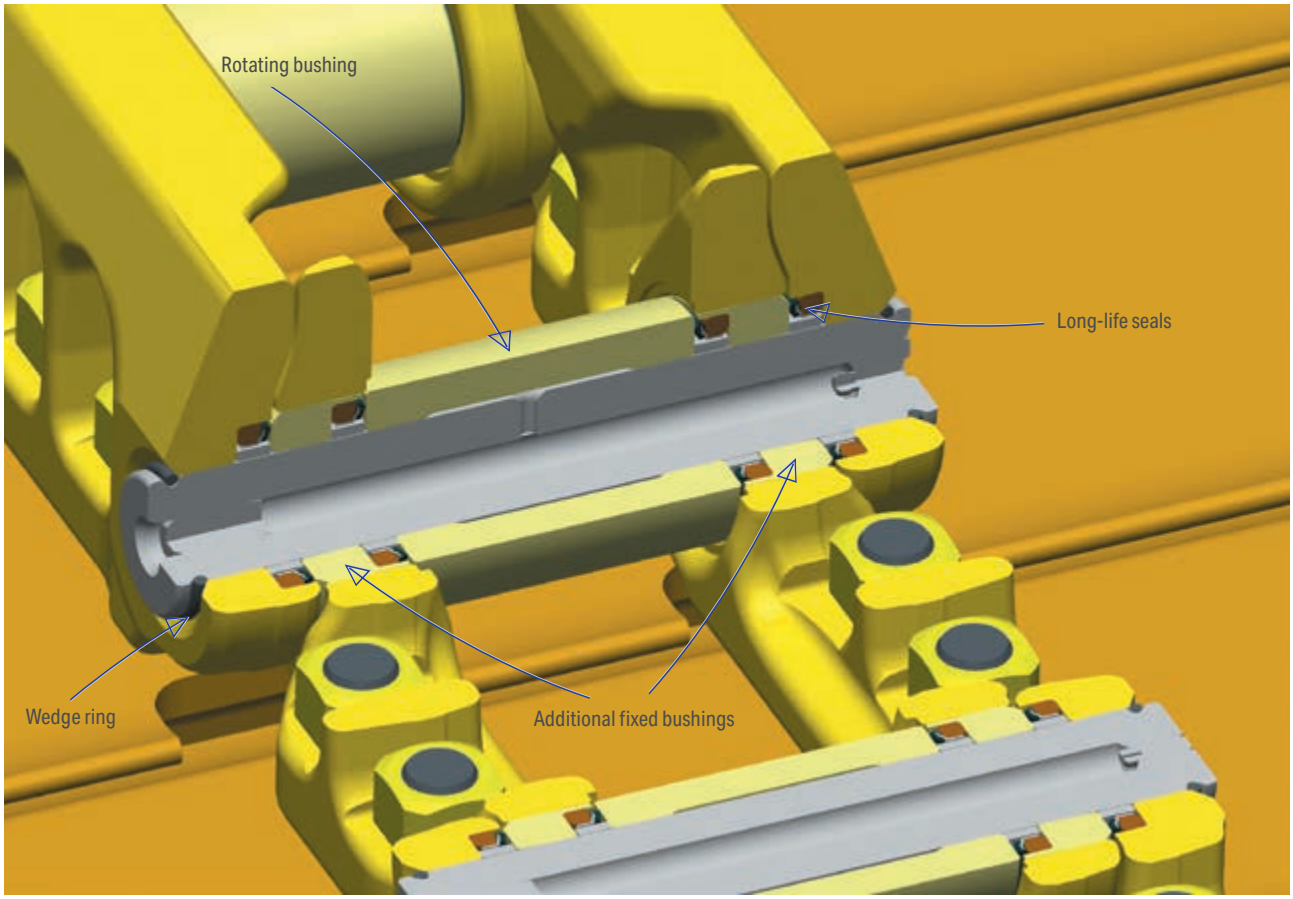

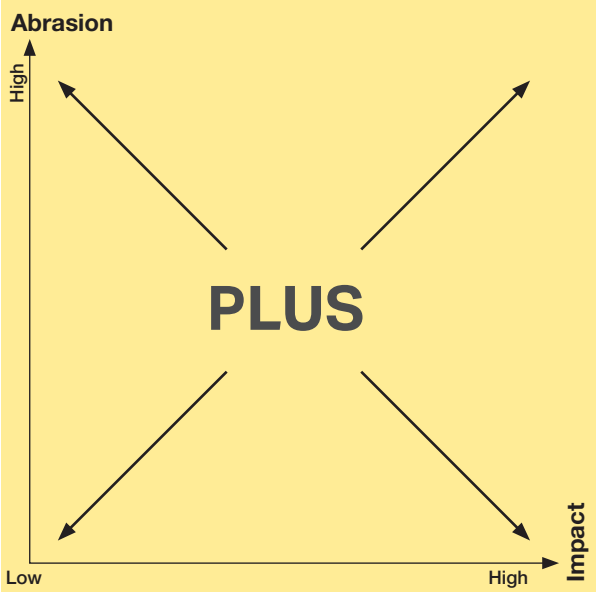

A PLUS undercarriage is the ideal solution for any application.

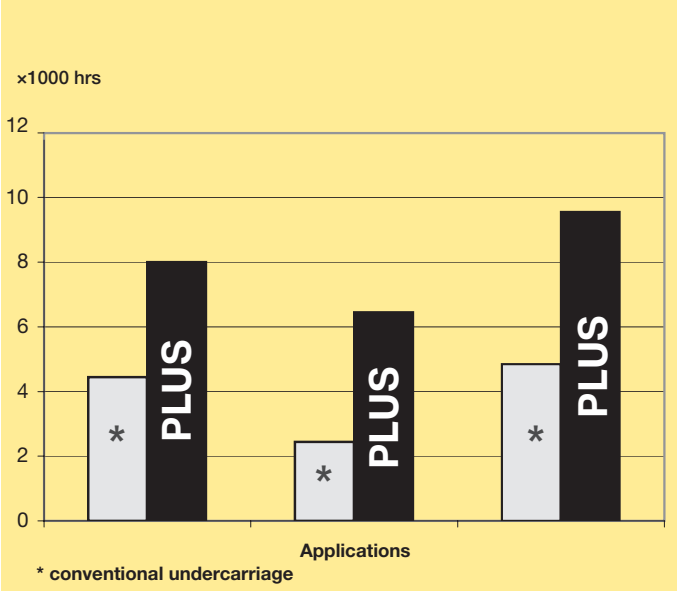

Field tests prove that a PLUS undercarriage lasts significantly longer than a conventional undercarriage, no matter the application.

* Wear life can vary based upon machine application/operation, ground foot conditions and lack of UC maintenance

Abrasion Resistant (AR) track

The bushings of the Abrasion Resistant track (AR) are thoroughly heat treated. The track is available with heavy duty or standard links, depending on the machine. Developed for mid-size Komatsu bulldozers (D41, D51, D61, D65), AR is designed specifically for abrasive and low impact applications.

Key differences	Key benefits
Bushings are heat treated and hardened. They are harder and less flexible than standard bushings.	50% longer life than a standard track in abrasive and low impact conditions. *1
HD links are higher than standard. Pins and bushings are also bigger than standard ones. *2	Longer link life and higher durability of the entire track chain.

Note *1: Results will vary depending on terrain type, weather, job application, operational and maintenance practices.
Note *2: HD links are available on D41 and D65 only.

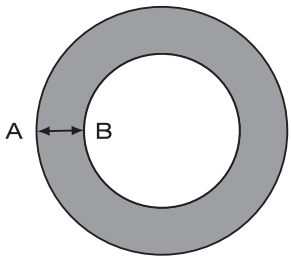

Bushing cross section: The entire bushing wall is hardened (from point A to B)

HD Abrasion Impact Resistant (HD-AIR) track

The HD-AIR track was developed by Komatsu for D65 and D85 bulldozers. It features AIR bushings that are more impact resistant than on the standard track and more flexible than on the AR track, making the track suitable for both abrasive and impact applications. It is also equipped with heavy duty links that are bigger and more durable than standard ones.

Key differences	Key benefits
Bushing's outer diameter is more heat treated and hardened than a standard one.	Longer wear life than a standard bushing
Softer area between the bushing's outer and inner diameter, to retain bushing flexibility.	AIR bushing is more flexible than the AR, and can be used on a much wider range of applications.
HD links are higher than standard. Pins and bushings are also bigger than standard ones.	Longer link life and higher durability of the entire track chain.

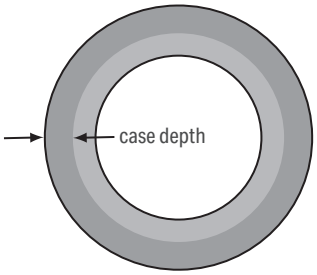

AIR bushing cross section

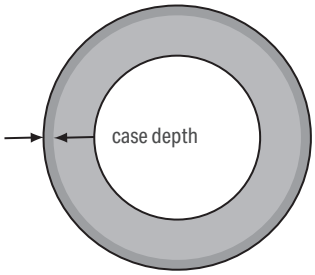

Standard bushing cross section

Dual bushing track

The dual bushing track is a unique system with two bushings, an inner fixed bushing with an outer bushing that rotates around it. Developed for Komatsu's larger class bulldozers (D275, D375, D475), it is designed specifically for abrasive and low impact applications.

Dual bushing track

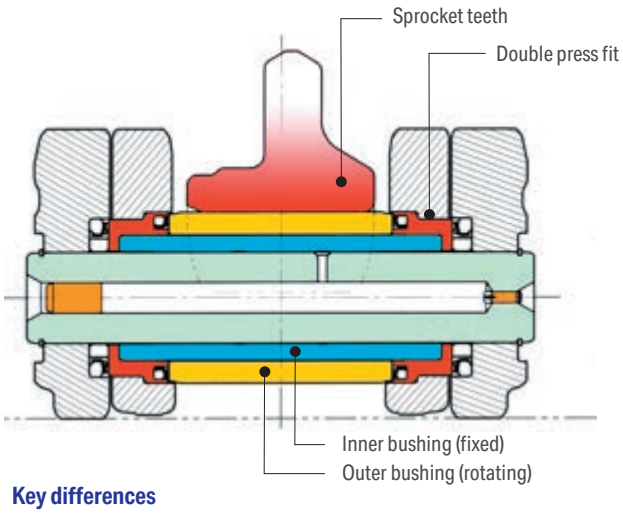

Standard track

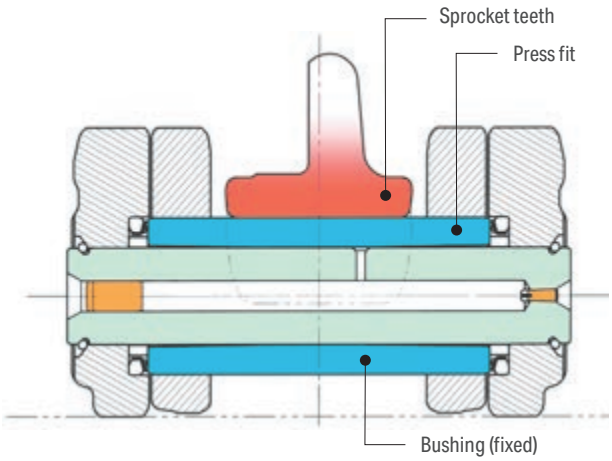

Key differences	Key benefits
Outer bushing rotates around the inner one, which is fixed around the pin. Exclusive sprocket segments are required as the dual bushing is bigger than the standard one.	100% longer life than standard track in abrasive and low impact conditions. *1
All track rollers must be single flange type to avoid interference between the inner flanges and bushings as the wear of links and rollers advances.	Cost savings on track rollers, as single flange rollers are less expensive than double flange rollers.

Note *1: Results will vary depending on terrain type, weather, job application, operational and maintenance practices.

General Construction (GC) track

Developed for 30-ton and 40-ton excavators, the GC track is a cost effective alternative to the Standard track. Suitable for any abrasive environment and for low to moderate impact applications such as sand, soil, civil construction, general excavation, dirt loading. Attachment type: bucket. Not suitable for high-impact applications, such as rocky sites, quarry, demolition, forestry & logging. Attachment type: hydraulic breakers.

Key differences	Key benefits
Weight and size: same as Standard track. Bushings and Seals: same performance as Standard track. Links and Pins: less impact resistance than Standard track. Same abrasion resistance as Standard track.	If used in the appropriate applications, the expected GC track life is the same as Standard track.

Civil Engineering (CE) undercarriage system

Developed for 20-ton excavators, the CE undercarriage system is a cost effective alternative to the Standard track. Suitable for any abrasive environment and for low to moderate impact applications such as sand, soil, civil construction, general excavation, dirt loading. Attachment type: bucket. Not suitable for high-impact applications, such as rocky sites, quarry, demolition, forestry & logging. Attachment type: hydraulic breakers.

Key differences	Key benefits
Weight and size: same as Standard track. Seals: same performance as Standard track. Bushings, links and pins: less impact resistance than Standard track. Same abrasion resistance as Standard track.	CE line includes all common UC wear parts: track link assembly, sprockets, idlers, carrier rollers & track rollers

Komatsu undercarriage options

Choose the very best undercarriage for your needs

A complete range

One size does not fit all. We offer a complete range of high-quality parts for your Komatsu bulldozers and excavators, tailored to specific applications.

Optimised heat treatment

Thanks to our patented heat treatment process, our steel undercarriage components are optimally hardened to deliver the perfect balance between long wear life and strong impact resistance.

Superior seals

Seals durability is a key to long components' life. Komatsu F5 seals are designed with a unique load ring shape that keeps high sealing longer.

Lower operating costs

Komatsu genuine undercarriages offer outstanding quality, long lifetime, and parts tailor-made for your application. This adds up to real cost savings, with fewer work stoppages, and reduced labour costs.

Machine model	Undercarriage type	Application
D37EX/PX D51EX/PX D61EX/PX D65EX/PX/WX D71EX/PX D85EX/PX D155AX D175AX	Parallel Link Undercarriage System (PLUS)	Ideal for any application – whatever the level of impact and abrasion.
D51EX/PX D61EX/PX D65EX/PX/WX D71EX/PX	General Construction (GC) PLUS track	Suitable for low to moderate impact applications. Examples: soil and civil construction.
D41E/P D51EX/PX D61EX/PX D65EX/PX/WX	Abrasion Resistant (AR) track	Abrasive or very abrasive, soft and low-impact applications. Examples: phosphate and sand mines.
D65EX/PX/WX D85EX/PX	Heavy-Duty Abrasion Impact Resistant (HD-AIR) track	All applications and conditions: standard or heavy-duty, low or high impact, as well as abrasive ones.
D275A/AX D375A D475A	Dual Bushing track	Abrasive or very abrasive, soft and low-impact applications. Examples: phosphate and sand mines.
PC300 PC400	General Construction (GC) track	Suitable for any abrasive environment and for low to moderate impact applications such as sand, soil, civil construction, general excavation, dirt loading. Attachment type: bucket.
PC200	Civil Engineering (CE) undercarriage system	Suitable for any abrasive environment and for low to moderate impact applications such as sand, soil, civil construction, general excavation, dirt loading. Attachment type: bucket.

Contact your Komatsu Distributor now, for expert advice on the best option available for your needs.

Operational and maintenance tips

Maximize your undercarriage life and minimize your costs

Undercarriage wear is normal and unavoidable. However, a few simple tricks can help you manage it efficiently and reduce your costs.

Operational tips

Select the right shoe for the job

Choose the narrowest shoes possible that still provide proper floatation for your application. Wide shoes on hard terrain will have a negative impact on the undercarriage lifetime.

Minimize high speed travel

Avoid unnecessary high speed, to decrease avoidable wear on all undercarriage components.

Minimize reverse travel

Limit unnecessary reversing and lower reverse speed, to decrease avoidable load between bushings and sprocket teeth, and faster and unnecessary wear.

Avoid spinning the tracks

Spinning and slipping the tracks accelerates wear on all undercarriage components, especially on grouser bars.

Avoid favoring one side

When possible, use alternate direction steering and try to work with both sides of the machine to limit uneven wear of undercarriage components.

Maintenance Tips

Maintain proper track tension

Check track tension daily. A tight track increases load and wear on the seals and all undercarriage components. A loose track can cause improper engagement between bushings and sprockets, and damage track guidance components. Refer to the Operation & Maintenance Manual of your Komatsu machine for details on maintaining proper track tension.

Keep it clean

Clean the undercarriage frequently. Accumulation of mud and debris increases track tension, does not allow rollers to turn properly, and increases fuel consumption.

Visual inspection

Check daily for loose bolts and pins, leaking seals, bent or cracked shoes, and abnormal wear.

Measure your undercarriage wear

Maximize the life of your components by measuring and monitoring wear at least twice a year. Ask your Komatsu Distributor for details.

Your Komatsu partner:

komatsu.eu

© 2026 Komatsu Europe International N.V. All rights reserved. Printed in Europe. FENS00910-04 10/2026