WA475-11

Wheel loader

Engine power
257 kW / 345 HP @ 1600 rpm

Operating weight
24740 - 26430 kg

Bucket capacity
4.2 - 5.5 m^3

A new generation of loaders with

the power to move more

36% *Increased engine torque**

19% *Increased engine power**

Up to 6% *Reduced fuel consumption**

* Compared with the previous model

Engine power	Operating weight	Bucket capacity
257 kW / 345 HP @ 1600 rpm	**24740 - 26430 kg**	**4.2 - 5.5 m^3**

Powerful and fuel-efficient

- Powerful next-generation EU Stage V engine with 257 kW
- Komatsu Hydraulic Mechanical Transmission (K-HMT)
- Komatsu Traction Control System (K-TCS)
- Massive lifting power and breakout force
- Independent control of driveline & work equipment
- High-efficiency buckets

Total versatility

- Load Pilot weighing system
- Operator Assistance System (option)
- Aggregate handling specification (option)
- Tool linkage (option)
- Factory-fitted special options

First-class operator comfort

- Exceptionally ergonomic operation in the completely remastered cab
- Angle Feedback Joystick Steering (AFJS) (option)
- New design steering wheel
- Full digital dashboard
- Comfortable standard seat and all-new high-comfort seat options
- Keyless start with operator identification system

Safety

- High-definition rear-view camera
- Rear object detection system (option)
- Surround-view camera system (option)
- Full LED working lights
- Front step for windshield cleaning

Digital assistance & guidance

- Komtrax – Komatsu wireless monitoring system
- Smart Construction Fleet (option)
- Smart Construction Smart Quarry Site (option)

Easy maintenance

- Tiltable one-piece engine hood
- Daily service points easily accessible from the ground
- Wide core radiator with auto-reverse fan
- Automatic central lubrication system
- Extended service intervals
- Komatsu Care program (regional differences apply)

Komatsu Hydraulic Mechanical Transmission (K-HMT)

K-HMT combines the benefits of hydrostatic and mechanical powertrains. This innovative technology, developed by Komatsu, provides extra power to the WA475-11, along with lower fuel consumption (compared with the previous model) and industry-leading productivity. An electronic controller works to maintain the engine speed low and constant. Minimum interaction is required, and operations are easier.

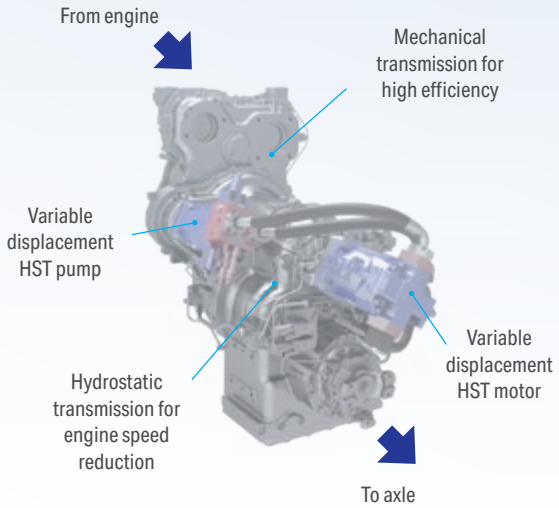

Komatsu traction control system (K-TCS)

The Komatsu Traction Control System (K-TCS) controls the K-HMT and engine to automatically optimise traction based on work conditions. Rim pull can be set to four levels to prevent wheel spin on any terrain. Consistent traction increases productivity while reducing tyre wear and operating costs.

Travel speed control dial

Machine speed can be kept constant thanks to the integrated travel speed control dial, with no need to apply the brake even when travelling downhill.

Powerful and fuel-efficient

Improved aftertreatment

The aftertreatment system has been optimised for the new engine, with exhaust gas recirculation (EGR) removed and diesel particulate filter maintenance intervals extended. When the optional ultra-low-ash engine oil is used from the first fill, the diesel particulate filter achieves a service life of up to 16000 hours, reducing downtime and increasing machine availability.

HVO diesel fuel ready

Komatsu diesel engines are compatible with paraffinic fuels such as HVO, GTL and BTL, in line with EN 15940:2023. All new Komatsu wheel loaders leave the factory with an initial fill of HVO diesel.

Next-generation Komatsu DBA127 engine

The new engine delivers increased power and torque at lower revolutions, enhancing productivity while reducing operating costs. A streamlined design with fewer components makes the engine simpler, less complex, and easier to maintain. Incorporating the latest state-of-the-art technology, the engine burns fuel more efficiently than the previous model.

Maximised efficiency

Engine-off management

Komatsu's auto idle shutdown and auto power-off functions automatically turn off the engine after it idles for a preset period of 3 to 60 minutes, reducing unnecessary fuel consumption, exhaust emissions, and operating costs. The delayed engine shutdown uses the temperature monitoring system to allow even shorter idling times. In addition, an Eco-gauge and Eco-guidance tips on the cab monitor further support efficient operation.

High precision steering

The re-designed steering system is more powerful and accurate. This eases Load & Carry operations on rough terrain and enhances the smooth controllability of the machine.

Load Pilot with efficiency guidance

The Load Pilot is a large, easy-to-read display in the center of the main monitor. It shows the current payload, the weight already loaded, the remaining load to reach a preset target, and daily load records. Using machine data on material movement and fuel consumption, it provides accurate values for fuel efficiency and overall performance, helping the operator work more efficiently.

Driveline with automatic braking function

The WA475-11 has an automatic engine brake that helps to slow down the machine smoothly when the operator takes a foot off the accelerator. It also reduces brake wear. In addition, the new auto hill-holding function makes it very easy to operate on a slope.

Automatic digging system

The automatic digging system actuates the bucket tilt and lifting operations by detecting the sensing pressure applied to the work equipment. The system adapts to different types of material with no human intervention required. Operator fatigue is greatly reduced and ideal load capacity ensured.

Independent control of driveline and work equipment

This revolutionary system greatly simplifies operations and delivers shorter V-shape cycles. Boom lifting speed is now controlled by the hydraulic lever instead of the accelerator pedal, making operation more intuitive. The optimal balance between travel speed and boom lifting speed is easily achieved, allowing the WA475-11 to approach the loading area with exceptional smoothness.

Start raising work equipment

Boom lifting speed is controlled only with the hydraulic lever, and no longer by the accelerator pedal.

Simultaneously operate work equipment and travel system

No dragging of the brake.
Fuel economy is improved.

Approaching dump truck

The brake pedal is used only to decelerate and stop.

First-class comfort

Newly designed cab: unrivalled operator convenience

The all-new Komatsu SpaceCab™ on the Komatsu "Dash 11" wheel loaders features more comfort and visibility, making these models a dream to operate. Entering and exiting the WA475-11 is facilitated by angled steps, large handrails and rear hinged doors with a wide opening angle. A standard second door further eases egress and communications on the jobsite.

High visibility and ergonomic controls help to maximise the operator's productivity. The lever console features a new command-selector dial and is adjustable on five axes to suit any operator. A slightly increased internal air pressure prevents dust and other particulates from entering the cab.

Perfect all-round visibility

A bay style window, a large curved front screen and floor-to-ceiling glass surfaces contribute to all-round visibility. All glass surfaces are tinted and feature a UV radiation filter to minimise the heat caused by the sun.

State-of-the-art controls

Fully digital driver information system

All key machine information is now displayed digitally for the operator's convenience. The new 8-inch (20 cm) LCD screen delivers high-resolution graphics, ensuring clear, easy-to-read information at a glance.

Angle Feedback Joystick Steering (AFJS) (option)

The newly developed joystick steering is extremely precise and very easy to use even at maximum travel speed. By eliminating the steering wheel, the space in the cabin and the overview of the work equipment are increased.

Ergonomic hydraulic levers

Ergonomically designed control levers support precise work and provide perfect grip when it matters in difficult terrain. The well thought-out design of the control levers enables fatigue-free work.

High definition rear-view monitor

The 10-inch rear-view monitor provides a crystal clear image for a good overview even behind the machine.

Keyless start

Keyless start through the signal starter knob and a passcode entered on the monitor enhance convenience and security. Alternatively, an electronic transponder key can be used for quick and secure access. Operator ID ensures that all driver preferences are stored individually.

Operator Assistance System (option)

Operator Assistance System

The Operator Assistance System is a 12.1" touchscreen that outperforms the standard rear-view monitor with seamless at-a-glance accessibility. Enhance productivity, efficiency, and safety with an intuitive interface for the extended Load Pilot payload meter, high definition rear-view camera and a performance-boosting loading guidance module.

Loading guidance

Loading guidance is a new feature that enhances operator skills directly on site, improving performance and boosting efficiency. Based on a new algorithm, the system continuously self-learns from each loading cycle, helping operators develop into expert loaders.

Surround-view camera system (option)

With three additional digital cameras, the system provides a 360° surround view of the machine, giving the operator perfect visibility of the working area at a glance on the monitor.

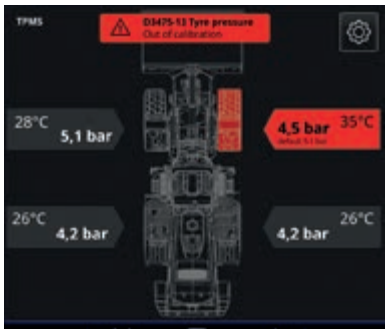

Tyre Pressure Monitoring System (TPMS) (option)

Provides real-time tyre pressure and temperature data, instantly alerting the operator to pressure loss to help prevent tyre damage and downtime.

Digital assistance & guidance

KOMTRAX

The way to higher productivity

Komtrax turns telematics data into actionable insights for your fleet and equipment, empowering your business to make well-informed, data-driven decisions. By creating a tightly integrated web of support, Komtrax allows for proactive and preventive maintenance to minimise downtime and facilitate peak machine performance.

Productivity analytics for mixed fleets

Identify logistic bottlenecks, track cycle times and load volumes, and optimise site productivity in real time. Both solutions use geolocation data to give you actionable insights, and depending on your setup, you can choose the flexibility of Smart Construction Fleet or the advanced integration of Smart Quarry Site.

Smart Construction Fleet

Designed for speed and simplicity, Smart Construction Fleet provides a comprehensive overview of your operations by tracking nearly any equipment. Just plug the Smart Construction Fleet device into a 12 V outlet or use the mobile app, and the whole site is operational under 10 minutes.

Smart Quarry Site

Smart Quarry Site provides deeper, more detailed insights by integrating dedicated hardware directly with your equipment's CAN bus. An in-cabin monitor provides real-time payload data from dump trucks to loaders, helping operators work in sync for higher efficiency. Thanks to peer-to-peer communication, data keeps flowing even without network connection.

Easy maintenance

Excellent serviceability

A powered tilting hood provides full access to the engine compartment. Side doors give quick and convenient access for daily checks and service. Full rear fenders are standard, a gauge on the AdBlue® fill cap minimises overfilling. Servicing costs are remarkably reduced, which provides a lower lifecycle cost.

Maintenance monitoring

The maintenance information displayed on the monitoring system provides operators with timely service reminders, alerts, and diagnostic data. This supports correct maintenance, enhances machine reliability, and extends equipment life while minimizing operating costs and downtime.

Wide core radiator with auto-reverse fan

A wide core radiator prevents clogging even when working in a dusty environment. To minimise manual cleaning, a reversible fan blows dust out, automatically or on demand. The "automatic reverse" function allows to set the cleaning length and the time between cleaning to adjust perfectly to the working conditions.

Diesel particulate filter regeneration

No interruption or extension of daily work is required to regenerate the diesel particulate filter system. Due to its superior Komatsu technology, KDPF regeneration takes place automatically, at any time.

Automatic central lubrication system

The automatic central lubrication system reduces the daily service work to the absolute minimum. Robust piping ensures consistent lubrication and operating reliability, and significantly increases the machine's service life. The system is electronically monitored.

Convenient and safe access to daily service points

Tailored solutions

Working gear division

Komatsu wheel loaders combined with a wide range of genuine Komatsu attachments provide the perfect solution for any industry sector. For special applications our "Working Gear" division offers purpose-built machines and attachments. The tailor made solutions allow high performance and outstanding reliability even under toughest conditions.

Waste & Recycling

Renowned for high quality standards and reliability, Komatsu meets the huge demand placed on machines by the waste management industry with a wide range of options and modifications available ex factory for our base machines. This provides the flexibility to adapt the Komatsu wheel loader range to the specific requirements of different waste handling applications and jobsite conditions. Whether you choose the full waste specification or individual components, you're guaranteed increased machine performance, availability and efficiency.

Salt & Chemical

A corrosive environment is one of the toughest challenges for any machine. Upgraded with a special coating on the metal parts and with various optional modifications to fit the application at hand, Komatsu "Salt & Chemical" configured wheel loaders hold up even under the most aggressive conditions. Reduced downtime, less maintenance and repair costs and a long lifetime: Komatsu machines perform as well and last as long as in a non-corrosive environment.

Tool linkage

Tool linkage (option)

The new tool linkage dramatically increases tilting torque (vs Z bar) in the most exposed position - boom raised, fully dumped. This allows precise, easy handling of heavy loads such as unloading logs from a truck. The new tool linkage kinematics ensure the bell crank cannot interfere when using large buckets. This allows immediate use of existing customer buckets without modification or replacement.

Photo shows machine equipped with tool linkage and additional protective equipment

Aggregate handling specification (option)

This innovative Z-bar linkage is specifically designed for rehandling applications with high-capacity, direct-mounted buckets. Its open design enhances visibility for truck loading and hopper feeding. Ideal for handling large amounts of material at fast cycle times, the aggregate handling specification ensures effortless loading operations thanks to its superior breakout force and high tipping load. Features such as reinforced axles and a reinforced frame structure provide robust support for any bucket.

KOMATSU

Komatsu quality & safety

Optimal jobsite safety

Safety features on the Komatsu WA475-11 comply with the latest industry standards and work in synergy to minimise risks to people in and around the machine. The greatly improved visibility, along with a seat belt caution indicator and back-up alarm increase jobsite safety. Serrated steps, wide catwalks and large handrails allow safe and easy access to the cab and to maintenance check points.

Designed and built by Komatsu

The engine, hydraulics, power train, front and rear axles are original Komatsu components. All these components are subject to the highest quality standards right down to the smallest screw. All components are fully co-ordinated with one another, thus offering the maximum efficiency and reliability.

The optional rear object detection system provides audio and visual alerts. It adapts to speed, steering, and slope to avoid false alarms, warning only when necessary.

Front step and tie-off points for safe and easy access to the front window.

Full LED lighting for improved visibility.

Specifications

Engine

Model	Komatsu DBA127
Type	Common rail direct injection, water-cooled, emissionised, turbocharged, after-cooled diesel
Engine power	
at rated engine speed	1600 rpm
ISO 14396	257 kW / 345 HP
Max. torque / engine speed	2068 Nm / 1150 rpm
No. of cylinders	6
Bore × stroke	130 × 160 mm
Displacement	12.7 l
Fan drive type	Hydraulic, reversible
Alternator	140 A / 24 V
Starter motor	11 kW / 24 V
Filter	Main-flow filter with water separator
Air filter type	Dry-air filter with automatic dust emission and preliminary purification including a dust display
Fuel	Diesel fuel, conforming to EN590 Class 2/ Grade D. Paraffinic fuel capability (HVO, GTL, BTL), conforming to EN 15940:2016

Transmission

Type	Komatsu Hydraulic Mechanical Transmission (K-HMT)
Max. travel speeds (forwards/backwards) (tyres 26.5 R25)	
Speed range	0 - 38 / 0 - 28 km/h

Chassis and tyres

System	4-wheel drive
Front axle	Komatsu HD axle, semi-floating (LSD-differential optional)
Rear axle	Komatsu HD axle, semi-floating, 26° swing angle (LSD-differential optional)
Differential	Spiral bevel gear pair
Final drive	Planetary gear in an oil bath
Tyres	26.5 R25

Brakes

Operating brakes	Hydraulically actuated, wet multi-disc brakes on all wheels
Parking brake	Wet multi-disc
Emergency brake	Uses the parking brake

Cabin

Two-door SpaceCab™ in conformity with ISO 3471 with ROPS (Roll Over Protective Structure) in conformity with SAE J1040c and FOPS (Falling Object Protective Structure) in conformity with ISO 3449. The air-conditioned pressurised cabin is mounted upon hydrobearings and is noise dampened.

Hydraulic system

Type	Komatsu CLSS (Closed Centre Load Sensing System)
Hydraulic pump	Variable piston pump
Working pressure	360 kg/cm^2
Maximum pump flow	306 l/min
No. of hydraulic/bucket cylinders	2/1
Type	Double-action
Bore diameter × stroke	
Boom cylinder	150 × 764 mm
Bucket cylinder	180 × 540 mm
Hydraulic cycle with rated load bucket filling	
Raise time	5.8 s
Lowering time (empty)	3.1 s
Dumping time	1.8 s

Steering system

System	Articulated frame steering
Type	Completely hydraulic power steering
Steering angle to either side	40°
Steering pump	Variable piston pump
Working pressure	250 kg/cm^2
Pumping capacity	145 l/min
No. of steering cylinders	2
Type	Double-action
Bore diameter × stroke	95 × 441 mm
Smallest turn (outer edge of the tyre 26.5 R25)	6265 mm

Service refill capacities

Fuel tank	360 l
Engine oil	41 l
Hydraulic system	132 l
Cooling system	66 l
Front axle	57 l
Rear axle	57 l
Transmission case	40 l
AdBlue® tank	60 l

Environment

Engine emissions	Fully complies with EU Stage V exhaust emission regulations
Noise levels	
LwA external	107 dB(A) (2000/14/EC Stage II)
LpA operator ear	70 dB(A) (ISO 6396 dynamic test)
Vibration levels (EN 12096:1997)	
Hand/arm	≤ 2.5 m/s^2 (uncertainty K = 2.31 m/s^2)
Body	≤ 0.5 m/s^2 (uncertainty K = 0.58 m/s^2)

Contains fluorinated greenhouse gas HFC-134a (GWP 1430).
Quantity of gas 1.1 kg, CO_2 equivalent 1.57 t.

Dimensions and performance figures

Measurements and working specifications

	Bucket type				Bucket with raised bottom			
			w. teeth	w. BOC	w. teeth	w. BOC	w. teeth	w. BOC
	Bucket capacity (heaped, ISO 7546)	m^3	**4.5**	**4.7**	**4.5**	**4.7**	**4.7**	**4.9**
	Sales code		C76	C77	C86	C87	C82	C83
	Material density	t/m^3	1.8	1.7	1.8	1.7	1.7	1.6
	Bucket weight	kg	2255	2290	2240	2285	2315	2365
	Static tipping load, straight	kg	20240	20065	20345	20150	20175	20000
	Static tipping load, articulated (40°)	kg	17485	17330	17580	17405	17425	17265
	Break-out force, hydraulic	kN	200	190	210	200	200	190
	Lifting capability, hydr. at ground level	kN	240	240	245	240	240	235
	Operating weight	kg	25595	25640	25575	25635	25655	25710
	Turning radius at corner of tyres (40°)	mm	6265	6265	6265	6265	6265	6265
	Turning radius at bucket edge (40°)	mm	7080	7020	7125	7070	7155	7095
a	Reach at 45°	mm	1605	1450	1550	1395	1605	1450
b	Dumping height at 45°	mm	2755	2885	2810	2940	2755	2885
c	Hinge pin height	mm	4345	4345	4345	4345	4345	4345
d	Height top edge of bucket	mm	6090	6090	6030	6030	6090	6090
e	Digging depth	mm	155	185	155	185	155	185
f	Max. loading height at 45°	mm	3850	3850	3850	3850	3850	3850
A	Overall length, bucket grounded	mm	9630	9445	9550	9370	9630	9445
B	Wheel base	mm	3450	3450	3450	3450	3450	3450
C	Bucket width	mm	2990	3000	3160	3170	3160	3170
D	Width over tyres	mm	2990	2990	2990	2990	2990	2990
E	Track width	mm	2240	2240	2240	2240	2240	2240
F	Ground clearance	mm	500	500	500	500	500	500
H	Overall height	mm	3540	3540	3540	3540	3540	3540

All measurements with tyres 26.5 R25 (L3 with -25 mm offset) and additional counterweight (A15).
Details of dumping heights and reach to cutting edge or bolt-on cutting edge (BOC) or teeth.

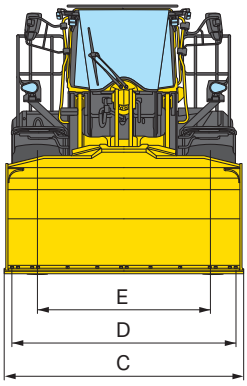

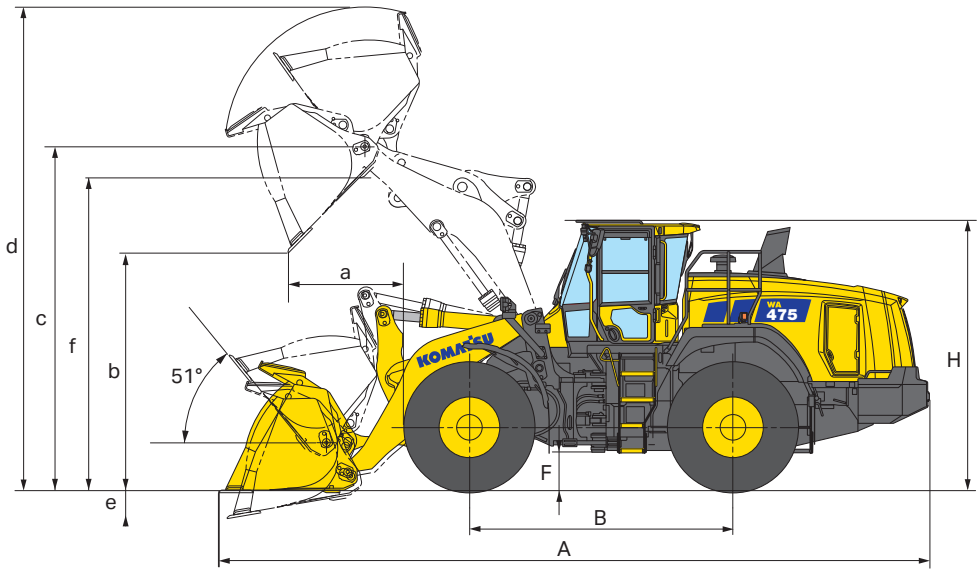

Measurements and working specifications

	Bucket type		Bucket with flat bottom				High-lift specification
			w. teeth	w. BOC	w. teeth	w. BOC	(Change in data)
	Bucket capacity (heaped, ISO 7546)	m^3	**4.2**	**4.4**	**4.5**	**4.7**	
	Sales code		C52	C53	C32	C33	
	Material density	t/m^3	1.9	1.8	1.8	1.7	- 0.3
	Bucket weight	kg	2310	2320	2355	2395	
	Static tipping load, straight	kg	20240	20070	20075	19890	- 2915
	Static tipping load, articulated (40°)	kg	17485	17330	17330	17170	- 2730
	Break-out force, hydraulic	kN	210	200	200	190	
	Lifting capability, hydr. at ground level	kN	245	240	240	235	- 50
	Operating weight	kg	25645	25690	25720	25765	+ 1340
	Turning radius at corner of tyres (40°)	mm	6265	6265	6265	6265	
	Turning radius at bucket edge (40°)	mm	7035	7000	7080	7020	+ 283
a	Reach at 45°	mm	1550	1395	1605	1450	+ 175
b	Dumping height at 45°	mm	2810	2940	2755	2885	+ 510
c	Hinge pin height	mm	4345	4345	4345	4345	+ 510
d	Height top edge of bucket	mm	6030	6030	6095	6095	+ 510
e	Digging depth	mm	155	185	155	185	+ 127
f	Max. loading height at 45°	mm	3870	3870	3870	3870	+ 510
A	Overall length, bucket grounded	mm	9550	9370	9630	9445	+ 600
B	Wheel base	mm	3450	3450	3450	3450	
C	Bucket width	mm	2990	3000	2990	3000	
D	Width over tyres	mm	2990	2990	2990	2990	
E	Track width	mm	2240	2240	2240	2240	
F	Ground clearance	mm	500	500	500	500	
H	Overall height	mm	3540	3540	3540	3540	

All measurements with tyres 26.5 R25 (L3 with -25 mm offset) and additional counterweight (A15).
High-lift specification includes heavy counterweight (A25).
Details of dumping heights and reach to cutting edge or bolt-on cutting edge (BOC) or teeth.

Change in data caused by:

			With standard counterweight (A05)	Tyres 26.5 R25 L4	Tyres 26.5 R25 L5	Tyres 775/65 R29
	Operating weight	kg	- 835	+370	+1160	+190
	Static tipping load	kg	- 1970	+260	+820	+135
	Static tipping load, articulated	kg	- 1645	+230	+725	+120
	Overall length	mm	- 175	-15	-35	0
a	Reach at 45°	mm	-	-10	-35	+2
b	Dumping height at 45°	mm	-	+16	+45	+3
D	Width over tires	mm	-	+20	+40	+115
H	Overall height	mm	-	+16	+45	+3

Tool linkage

Bucket with raised bottom

	Bucket capacity (heaped, ISO 7546)	m^3	4.7
	Sales code		QC77
	Material density	t/m^3	1.6
	Bucket width	mm	3000
	Bucket weight	kg	2000
	Static tipping load, straight	kg	19300
	Static tipping load, 40° articulated	kg	15880
	Break-out force hydraulic	kN	177
a	Reach at 45°	mm	1440
b	Dumping height at 45°	mm	2600
c	Hinge pin height	mm	4345
d	Height top edge of bucket	mm	6475
e	Max. loading height at 45°	mm	3765
	Digging depth	mm	125
	Operating weight	kg	27455

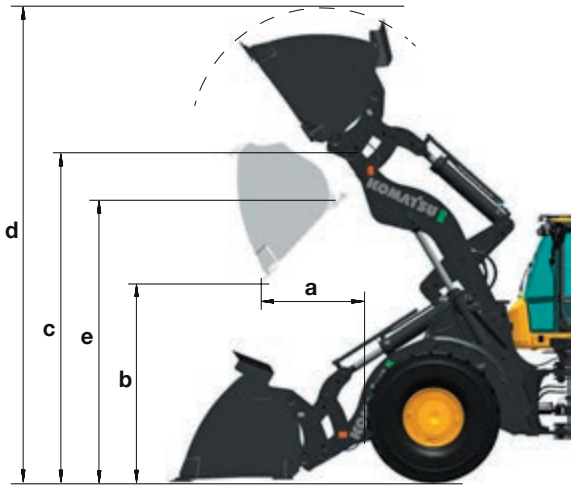

Log grapple (transport & sorting)

	Grapple cross-sectional area	m^2	3.1
	Sales code		Q912
	Grapple width	mm	1810
	Payload	kg	8300
	Hinge pin height	mm	4345
b	Reach at max. lifting height at 20° discharge	mm	1985
a	Reach at max. lifting height at 45° discharge	mm	1395
c	Max. grapple opening	mm	3525
d	Discharge height at 45°	mm	2660
e	Discharge height at 20°	mm	3285
f	Max. grapple opening in loading position	mm	3130
g	Manipulation height	mm	5105
h	Max. height	mm	7350
	Operating weight	kg	29410
	Heavy counterweight		(A25)
	Tyres		26.5R25 L4

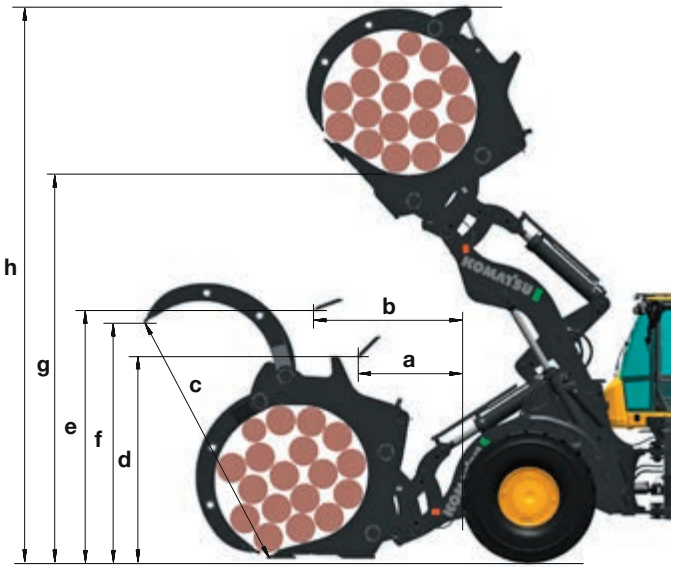

Typical material density (in ton/m^3) for light material and high-dump buckets

Waste glass, fine	1.4	Waste paper, loose	0.6
Waste glass, coarse	1.0	Waste paper, processed	1.0
Compost, dry	0.8	Hard coal, high density	1.2
Compost, wet	1.0	Hard coal, low density	0.9
Wood chips, saw dust	0.5	Domestic waste, loose & dry	0.8

If not stated otherwise, all measurements with tool linkage boom, quick-coupler, tyres 26.5 R25 L3 and additional counterweight (A15)

High-dump bucket (bulk materials)

	Bucket capacity (heaped, ISO 7546)	m^3	12.0	8.0	6.0
	Sales code		Q914	Q917	Q919
	Material density	t/m^3	0.5	0.8	1.0
	Tube style spill guard		w/o	with	w/o
	Bucket width	mm	4000	3400	3200
	Bucket weight	kg	4200	4300	3830
	Hinge pin height	mm	4345	4345	4345
a	Reach at 45°	mm	1890	1735	1685
b	Dumping height at 45°	mm	4575	4545	4685
c	Height top edge of bucket	mm	7660	7485	7280
d	Max. loading height at 45°	mm	4850	4845	4980
	Static tipping load, 40° articulated (L3 tyres)	kg	15225	14125	14425
	Static tipping load, 40° articulated (L5 tyres)	kg	16000	14855	15150
	Operating weight (L3 tyres)	kg	29900	29555	29085
	Operating weight (L5 tyres)	kg	30705	30785	30315
	Dump cylinders located inside/outside bucket		inside	outside	outside

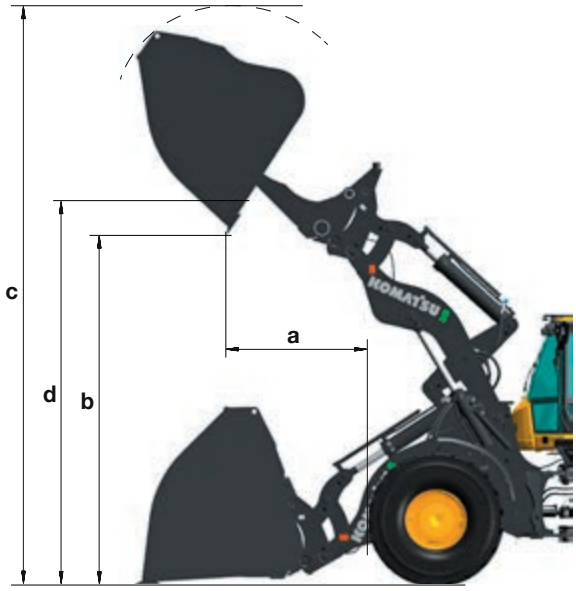

Light material bucket

	Bucket capacity (heaped, ISO 7546)	m^3	13.0	9.0	6.5
	Sales code		Q913	Q916	Q918
	Material density	t/m^3	0.5	0.8	1.1
	Tube style spill guard		w/o	with	w/o
	Bucket width	mm	4000	3400	3200
	Bucket weight	kg	3900	3330	2740
a	Reach at 45°	mm	1865	1670	1510
b	Dumping height at 45°	mm	2215	2365	2535
c	Hinge pin height	mm	4345	4345	4345
d	Height top edge of bucket	mm	6995	6790	6555
e	Max. loading height at 45°	mm	3780	3795	3800
	Static tipping load, 40° articulated (L3 tyres)	kg	14820	15460	16005
	Static tipping load, 40° articulated (L5 tyres)	kg	15565	16205	16755
	Operating weight (L3 tyres)	kg	29135	28565	27975
	Operating weight (L5 tyres)	kg	30360	29790	29200

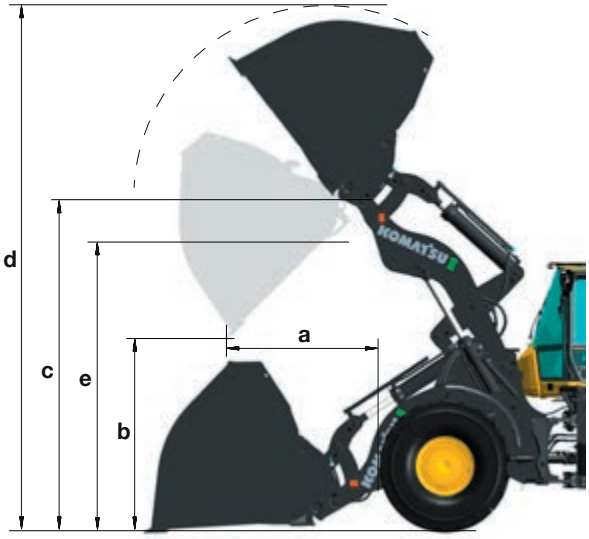

Fork tines

	Fork tine length	mm	1500
A	Max. reach at ground level	mm	1150
B	Max. reach	mm	1795
C	Max. reach at max. stacking height	mm	0775
a	Max. height fork-carrier	mm	5295
b	Hinge pin height	mm	4345
c	Max. stacking height	mm	4120
d	Height of forks at maximum reach	mm	1930
	Max. tipping load, 40°articulated	kg	13905
	Max. payload as per EN 474-3, 80%	kg	10000*
	Max. payload as per EN 474-3, 60%	kg	8345*
	Operating weight	kg	25805

* Payload limited by fork tine

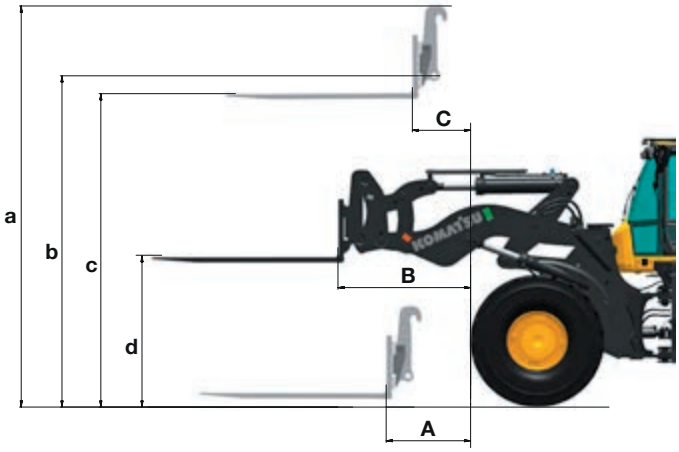

Aggregate handling linkage

Measurements and working specifications

	Bucket type			Bucket with raised bottom		
			w. teeth	w. BOC	w. teeth	w. BOC
	Bucket capacity (heaped, ISO 7546)	m^3	**5.1**	**5.3**	**5.3**	**5.5**
	Sales code		C17	C18	C12	C13
	Material density	t/m^3	1.7	1.6	1.6	1.5
	Bucket weight	kg	2420	2475	2490	2550
	Static tipping load, straight	kg	21345	21135	21320	20995
	Static tipping load, articulated (40°)	kg	18395	18205	18380	18070
	Break-out force, hydraulic	kN	190	185	185	180
	Lifting capability, hydr. at ground level	kN	240	235	235	230
	Operating weight	kg	26555	26610	26630	26685
	Turning radius at corner of tyres (40°)	mm	6265	6265	6265	6265
	Turning radius at bucket edge (40°)	mm	7170	7110	7185	7125
a	Reach at 45°	mm	1640	1485	1675	1520
b	Dumping height at 45°	mm	2720	2850	2685	2815
c	Hinge pin height	mm	4345	4345	4345	4345
d	Height top edge of bucket	mm	6170	6170	6235	6235
e	Digging depth	mm	155	185	155	185
f	Max. loading height at 45°	mm	3850	3850	3850	3850
A	Overall length, bucket grounded	mm	9680	9500	9730	9550
B	Wheel base	mm	3450	3450	3450	3450
C	Bucket width	mm	3160	3170	3160	3170
D	Width over tyres	mm	2990	2990	2990	2990
E	Track width	mm	2240	2240	2240	2240
F	Ground clearance	mm	500	500	500	500
H	Overall height	mm	3540	3540	3540	3540

All measurements with tyres 26.5 R25 (L3 with -25 mm offset) and heavy counterweight (A25).
Details of dumping heights and reach to cutting edge or bolt-on cutting edge (BOC) or teeth.

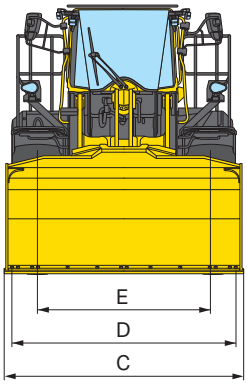

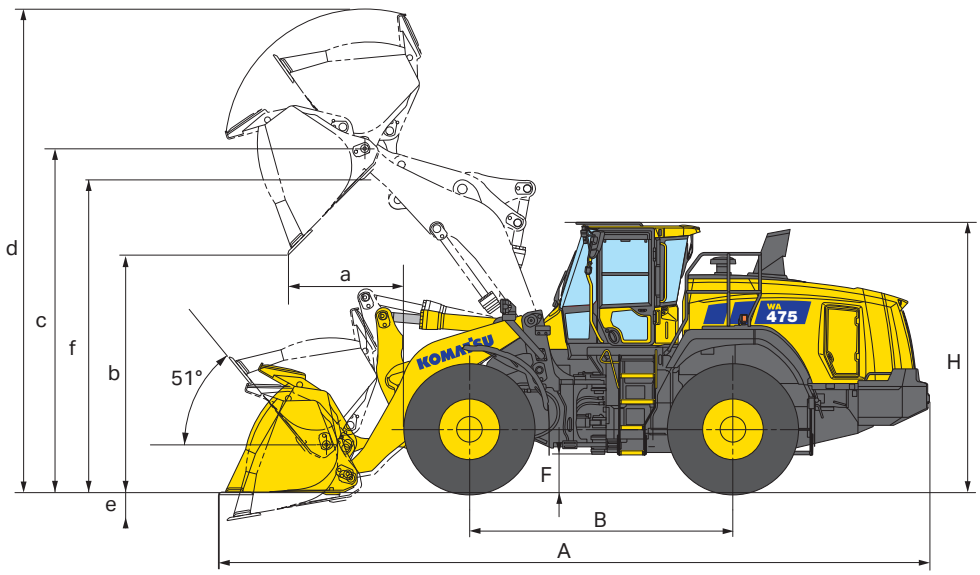

High-efficiency bucket range

Komatsu buckets enable easier bucket fill and significantly higher fill factors, contributing to more efficiency and less fuel consumption. They feature a longer bottom allowing for more content, a wider opening for an easier fill and a new rear shape that enables material to flow easily into the bucket. Their rounded sides give them a higher fill factor, and an integrated spill guard protects the bucket linkage. Flush screws (with BOC) reduce resistance when filling and keep material from clogging when dumping.

High-efficiency buckets with flat bottom

High-efficiency buckets with raised bottom

Bucket selection guide

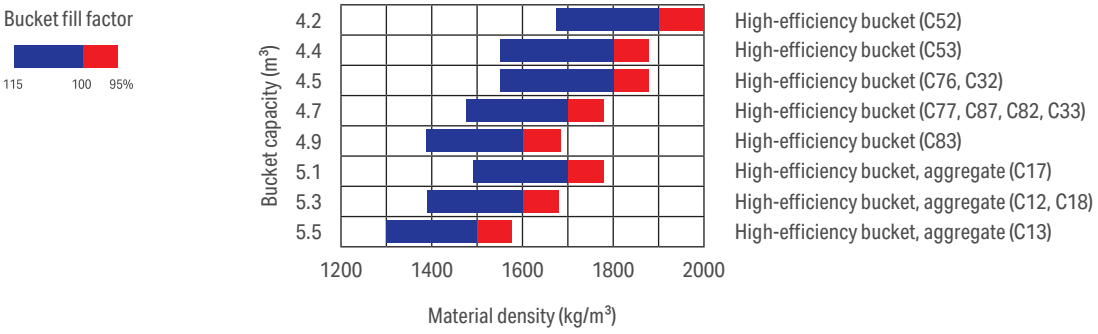

Typical material density – loose (in kg/m³)

Basalt	1960	Sand, damp	1690
Bauxite, kaolin	1420	Sand, wet	1840
Earth, dry, ex store	1510	Sand and clay, loose	1600
Earth, wet, excavated	1600	Sand and gravel, dry	1720
Gypsum, broken	1810	Sandstone	1510
Gypsum, crushed	1600	Slate	1250
Granite, broken	1660	Slag, broken	1750
Limestone, broken	1540	Stone, crushed	1600
Limestone, crushed	1540	Clay, natural	1660
Gravel, unscreened	1930	Clay, dry	1480
Gravel, dry	1510	Clay, wet	1660
Gravel, dry, 6 - 50 mm	1690	Clay and gravel, dry	1420
Gravel, wet, 6 - 50 mm	2020	Clay and gravel, wet	1540
Sand, dry, loose	1420		

Standard and optional equipment

Engine

Komatsu DBA127 turbocharged common rail direct injection diesel engine	●
EU Stage V compliant	●
Komatsu Diesel Particulate Filter (KDPF)	●
Selective Catalytic Reduction (SCR)	●
Adjustable idle shutdown	●
Adjustable delayed engine shutdown	●
Fuel filter with water separator	●
Batteries, maintenance free 2 × 140 Ah / 12 V	●

Chassis and tyres

Heavy-duty axles	●
Front fenders, long	●
Full rear fenders	●
Limited-slip differential (LSD) front and rear	○
Tyres 26.5 R25 L3, L4, L5	○
Tyres 775/65 R29	○

Hydraulic system

Independent control of driveline and work equipment	●
2-spool main control valve	●
EPC fingertip control, two levers, including: - 2-way bucket return leveling function - Boom raise & lower detent function - Automatic dig function	●
Automatic return-to-dig	●
3-spool main control valve	○
EPC fingertip control, three levers	○
EPC 1-lever (multifunction lever) with sliding proportional control for attachments	○

Transmission and brakes

Komatsu Hydraulic Mechanical Transmission (K-HMT)	●
Komatsu Traction Control System (K-TCS)	●
Auto hill-holding function	●

Cabin

Spacious double door driver's cab	●
ROPS/FOPS frame according to SAE/ISO	●
Air suspension seat, 2-point seat belt, seat heating	●
Right-hand console, swing-mounted to seat, 5-way adjustable	●
Automatic climate control system	●
Full digital dashboard	●
Integrated operator guidance system for payload and fuel efficiency (Load Pilot)	●
Eco-efficiency guidance	●
DAB+ radio with Bluetooth®, USB, AUX and hands-free kit	●
Keyless start with operator identification system	●
Remote key fob	●
Heated rear window	●
Rear window wiper	●
2× 12 V power supply	●
Sun roller blind, front	●
Adjustable steering column with steering wheel	●
Angle Feedback Joystick Steering (AFJS)	○
High-comfort air suspension seat, 4-point seat belt, seat heating & ventilation, pneumatic lumbar support	○
Operator Assistance System (OAS) with extended Load Pilot, loading guidance and rear-view monitor with camera	○
Tyre Pressure Monitoring System (TPMS) for OAS	○
Surround-view camera system for OAS	○
Remote door opener (switch)	○

Safety equipment

Emergency steering system	●
Vandalism protection	●
Back-up alarm	●
Battery main switch	●
Left and right-side yellow handrails	●
Rear-view mirrors, heated and remote controlled	●
High-definition rear-view camera with 10-inch monitor	●
Front window cleaning steps	●
Tie-off points	●
Fire extinguisher	○
Beacon (LED)	○
Optical back-up alarm (strobe light)	○
Back-up alarm (white noise version)	○
Rear object detection system (dual radar)	○

LED lighting system

2 head lights	●
Working lights, 2 front, 2 rear	●
2 reversing lights	●
Coming home light function	●
Additional working lights, 4 front, 4 rear	○
Adaptive working lights, 4 front, 6 rear	○

Service and maintenance

Power tiltable engine hood	●
Hydrostat-driven radiator fan with automatic reversing function	●
Wide core side-by-side radiator	●
Komtrax – Komatsu Wireless Monitoring System (4G)	●
Komatsu Care program (regional differences apply)	●
Sampling ports for oils and coolant	●
Tool-set	●
Automatic central lubrication system	●
Filling tool for central lubrication system	○
Turbo II air pre-cleaner, cyclone type	○

Attachments

Hydraulic quick-coupler	○
High-efficiency buckets with flat or raised bottom	○
High-dump buckets	○
Fork carrier and tines	○
Waste handling buckets	○
Light material buckets	○

A wide range of buckets and attachments is available. Your Komatsu distributor is ready to assist you with the selection of suitable options.

Other equipment

Counterweight (A05)	●
Electronically controlled load stabiliser (ECSS II)	●
Aggregate handling specification	○
High-lift specification	○
Salt & Chemical specification	○
Tool linkage	○
Additional counterweight (A15)	○
Heavy counterweight (A25)	○
Cold area kit (engine and cab pre-heating)	○
Special custom colour	○

Further equipment on request

● standard equipment
○ optional equipment

This specification sheet may contain attachments and optional equipment that are not available in your area. Please consult your local Komatsu distributor for those items you may require.
Materials and specifications are subject to change without notice.

Your Komatsu partner:

komatsu.eu

© 2026 Komatsu Europe International N.V. All rights reserved. Printed in Europe. VENSS08300-02 10/2026