# WB93S-8

## 4 wheel steering backhoe loader

**Engine power**
75.0 kW / 101 HP @ 2300 rpm

**Operating weight**
8305 - 9700 kg

**Bucket capacity**
1.1 $m^3$ (Standard bucket)

# WB93S-8

Engine power
**75.0 kW / 101 HP @ 2300 rpm**

Operating weight
**8305 - 9700 kg**

Bucket capacity
**1.1 m³**
**(Standard bucket)**

A user-friendly machine with

# top class performance

## Powerful and environmentally friendly

- EU Stage V engine
- Increased engine displacement
- Viscous fan clutch
- Monitoring system with Eco gauge
- Power and Eco mode improve fuel efficiency
- Maintenance-free Diesel Particulate Filter (DPF)
- Hyper vent switch for engine cooling fan

## First-class comfort

- Multi-function monitor with high resolution 7" LCD color display
- Air-suspended operator seat (standard)
- Ergonomic switch layout for the operator console
- Dial type fuel control and electric accelerator pedal
- Hammer piping (standard)
- Power assisted brake

## Total versatility

- 3 steering modes: 2WS, 4WS, crab
- Hydraulic side shift available
- Flip-over forks and pallet forks available
- Quick couplers for the front and rear buckets

## Safety first

- Anti-burst valves for stabilizers, boom and arm (standard)
- Emergency engine stop switch
- Seat belt caution indicator
- Unrivaled front visibility thanks to lateral exhaust pipe
- 'Street mode' function

## Easy maintenance

- Easy refilling from ground level for hydraulic oil, AdBlue® and fuel
- Maintenance information displayed on the monitor
- Rear tool box

## Komtrax

- Komatsu Wireless Monitoring System
- 4G mobile communications
- Increased operational data and reports

# Powerful and environmentally friendly

## Higher productivity

The Komatsu EU Stage V compact engine featuring state-of-the-art technology delivers the highest efficiency in a small package. The aftertreatment system combines a maintenance-free Diesel Particulate Filter (DPF) and Selective Catalytic Reduction (SCR). With ultra-low emissions, it provides a lower environmental impact and a superior performance to help reduce operating costs and lets the operator work in complete peace of mind.

## Komatsu fuel-saving technology

The core of the Komatsu backhoe loader hydraulics is the Closed Load Sensing System (CLSS). Thanks to its variable flow, and together with the 'Power' and 'Economy' working modes, the integrated engine management, the viscous fan clutch and the eco gauge, the correct power is supplied to the machine when it is needed, and fuel consumption reduced by up to 3%.

## Absolute control

The "Power Shuttle" transmission provides the machine with four forward and four reverse speeds, with synchronised mechanical shifting. The electro-hydraulic differential lock, together with the "Heavy-duty" axles, increases efficiency and the operator's confidence under any working conditions. An automatic "Speed-up" function during loader operations easily releases the full hydraulic power of the WB93S-8.

# First-class comfort

## Operator's environment

PPC servo-control is standard for the front loader. The dial type fuel control simplifies operation and engine speed adjustment. Air-suspended operator seat is standard, and switch layout for the operator console has a new ergonomic design.

## New multi-function monitor with more information

A high-definition 7″ LCD monitor provides excellent visibility. The high-definition LCD panel is less affected by the viewing angle and surrounding brightness, ensuring excellent visibility. Various alerts and machine information are displayed in a simple format. Useful information such as operation records, machine setting and maintenance data are also provided. The operator can easily navigate through screen pages with intuitive side buttons.

Convenient, ergonomic and precise control

Ergonomically designed switches

7″ multi-function monitor

# Maximized efficiency

## Loader

The front loader design ensures optimal parallel lifting; in addition, the divergent shape of the arm greatly improves visibility and provides excellent loading performance. The design of the backhoe features a clean and functional layout, with hydraulic piping and hoses along the boom. PPC servo-control is standard for the front loader.

## S-shape backhoe

The rounded shape of the backhoe enhances the loading ability of the machine and its capacity to overcome obstacles, while ensuring a high breakout force. The telescopic arm significantly increases the machine's versatility.

## Custom made

It's possible to choose from 3 steering modes: 2 wheel steering (standard operation), 4WS (agile and fast operation) and crab (confined areas). The many options offer a high level of customisation: hydraulic side-shift for the backhoe, LSS (Load Stabilizer System), radial tyres and quick couplers are just a few.

# Safety first

## Unrivaled all round view

The wide round glass surface presents a highly increased visibility. The bonnet shape, the lateral exhaust pipe and the upper front window make it easy and safe to work with the front loader. When operating the backhoe excavator, the operator can easily open the single frame window and comfortably overlook the surrounding area.

## Optimal jobsite safety

Safety features on the Komatsu WB93S-8 comply with the latest industry standards and work in synergy to minimise risks to people in and around the machine. Anti-burst valves are now included for backhoe operations and on stabilizers. A new "Engine shutdown" secondary switch, reachable from ground level, and a new optical seat belt alarm complete Komatsu's traditionally safe operator environment. For increased safety, the WB93S-8 includes new "Travel Neutral" lock and "Street Mode" functions.

Secondary engine shut down switch

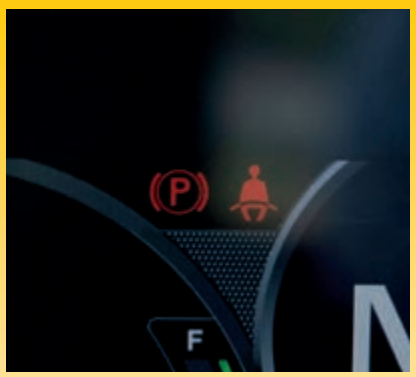


Seat belt caution

Anti-burst valves for stabilizers, boom and arm (Standard)

# Easy maintenance

## Excellent serviceability

Komatsu designed the WB93S-8 with an easy access to all service points. Routine maintenance and servicing are less likely to be skipped, which can mean a reduction of costly downtime later on. The radiator, aftercooler and oil cooler are made of aluminium to improve their efficiency and are mounted in parallel for quicker cleaning.

## Flexible warranty

When you purchase Komatsu equipment, you gain access to a broad range of programmes and services that have been designed to help you get the most from your investment. For example, Komatsu's Flexible Warranty Programme provides a range of extended warranty options on the machine and its components. These can be chosen to meet your individual needs and activities. This programme is designed to help reduce total operating costs.

AdBlue®, fuel and hydraulic oil tank are easily accessible on the machine side and refilled by ground level, ensuring a fatigue less operation

Daily maintenance is enhanced thanks to the double position front opening and the check point position easily accessible on the left side

Maintenance information displayed on the monitor

# Information & communication technology

## The way to higher productivity

Komtrax uses the latest wireless monitoring technology. Compatible on PC, smartphone or tablet, it delivers insightful and cost saving information about your fleet and equipment, and offers a wealth of information to facilitate peak machine performance. By creating a tightly integrated web of support it allows proactive and preventive maintenance and helps to efficiently run a business.

## Knowledge

You get quick answers to basic and critical questions about your machines – what they're doing, when they did it, where they're located, how they can be used more efficiently and when they need to be serviced. Performance data is relayed by wireless communication technology (satellite, GPRS or 4G depending on model) from the machine to a computer and to the local Komatsu distributor – who's readily available for expert analysis and feedback.

## Power

The detailed information that Komtrax puts at your fingertips 24 hours a day, 7 days a week gives the power to make better daily and long-term strategic decisions – at no extra cost. Problems can be anticipated, maintenance schedules customised, downtime minimised and machines kept where they belong: working on the jobsite.

## Convenience

Komtrax enables convenient fleet management on the web, wherever you are. Data is analysed and packaged specifically for effortless and intuitive viewing in maps, lists, graphs and charts. You can foresee eventual maintenance issues and required spare parts, and troubleshoot a problem before Komatsu technicians arrive on site.

# Specifications

# WB93S-8E0

## Engine

| | |
|---|---|
| Model | Komatsu SAA4D102SE-1 |
| Type | Common rail direct injection, water-cooled, emissionised, turbocharged, after-cooled diesel |
| Engine power | |
| at rated engine speed | 2300 rpm |
| ISO 14396 | 75.0 kW / 101 HP |
| ISO 9249 (net engine power) | 68.6 kW / 92.0 HP |
| No. of cylinders | 4 |
| Bore × stroke | 102 × 110 mm |
| Displacement | 3.6 ltr |
| Cooling fan | Viscous fan clutch |
| Air-filter type | Dry type air cleaner with clogging indicator |
| Fuel | Diesel fuel, conforming to EN590 Class 2/Grade D. Paraffinic fuel capability (HVO, GTL, BTL), conforming to EN 15940:2016 |

## Operating weight (appr.)

| | |
|---|---|
| Standard machine operating weight* | 8885 kg |
| Change in data caused by: | |
| Standard bucket | -305 kg |
| Heavy-duty bucket | +60 kg |
| 600 mm bucket (direct mount) | -155 kg |
| Standard arm | -230 kg |
| Pallet fork | -615 kg |
| Fork for 4×1 bucket | +235 kg |
| Air conditioner | +20 kg |
| Mech. quick-coupler (loader) | +140 kg |
| Mech. quick-coupler (backhoe) | +55 kg |

* Including 4×1 bucket, telescopic arm, 600 mm backhoe bucket.
Max. permitted total weight 10000 kg

## Hydraulic system

| | |
|---|---|
| System | SynchroSystem with Speed-up function for loader arm |
| Type | CLSS. Closed-centre system with load sensing and pressure compensation valves |
| No. of working modes | 2 (Power / Economy) |
| Hydraulic pump | Variable displacement axial pistons |
| Max. pump flow | 165 l/min |
| Working pressure (max.) | 250 bar |
| Main valve | LIFD "Load Independent Flow Divider" modular type |

## Steering system

| | | |
|---|---|---|
| System | 4 wheel steering (3 modes) with electronic alignment | |
| Turning radius (without using brakes) | | |
| Steering mode | 4WS | 2WS |
| at bucket edge (4x1 bucket) | 5905 mm | 9585 mm |
| at corner of tyres (28") | 5185 mm | 8855 mm |
| Turning radius (using brakes) | | |
| Steering mode | 4WS | 2WS |
| at bucket edge (4x1 bucket) | 5185 mm | 7400 mm |
| at corner of tyres (28") | 4400 mm | 6495 mm |

## Transmission

Switching between 4WD and 2WD is obtained through an electrohydraulic system. The 4 speed mechanical shift is synchronised. The transmission is operated through a torque converter and a power shuttle reversing shift "Power Shuttle" type.

## Max. travel speeds (forwards/backwards)

| | |
|---|---|
| 1. gear | 6 km/h |
| 2. gear | 10 km/h |
| 3. gear | 22 km/h |
| 4. gear | 40 km/h |

## Chassis and tyres

| | |
|---|---|
| Frame | Reinforced and closed box structure |
| Axles | Heavy-duty axles |
| Final drive | Planetary gear in oil bath |
| Front axle total oscillation angle | 16° |
| Max. front/rear axle static load rating | 20395 kg |
| Tyres (standard) | 16.9 × 28 - 12 PR |

## Brakes

Oil immersed disc brakes are actuated by individual braking on each rear wheel with 2 separate pedals. Total integral braking on the 4 wheels is activated by operating the two pedals at the same time.

| | |
|---|---|
| Parking brake (safety brake) | Caliper brake operated through a hand lever |

## Cab

Two-door cab in conformity with ISO 3471 with ROPS (roll over protective structure) in conformity with SAE J1040c and FOPS (falling object protective structure) in conformity with ISO 3449.

## Service refill capacities

| | |
|---|---|
| Engine oil | 8 l |
| Cooling system | 12 l |
| Fuel tank | 135 l |
| Hydraulic oil tank | 41.5 l |
| Hydraulic system | 110 l |
| Axle front | 11.8 l |
| Axle rear | 11.8 l |
| Brake system | 0.8 l |
| AdBlue® tank | 13.5 l |

## Environment

| | |
|---|---|
| Engine emissions | Fully complies with EU Stage V exhaust emission regulations |
| Noise levels | |
| LwA external | 103 dB(A) (2000/14/EC Stage II) |
| LpA operator ear | 75 dB(A) (ISO 6396 dynamic test) |
| Vibration levels (EN 12096:1997) | |
| Hand/arm | ≤ 2.5 m/s² (uncertainty K = 1.2 m/s²) |
| Body | ≤ 0.5 m/s² (uncertainty K = 0.2 m/s²) |
| Contains fluorinated greenhouse gas HFC-134a (GWP 1430). Quantity of gas 1.5 kg; $CO_2$ equivalent 2.15 t | |

## Backhoe

| | |
|---|---|
| System | Reinforced structure, casted swing support and arm ends |
| Boom swing angle | 180° |
| Bucket digging force (ISO 6015) | 5985 daN (6100 kg) |
| Arm crowd force (ISO 6015) | 3925 daN (4000 kg) |
| Outriggers | Vertical outriggers with adjustable wear device |

## Loader

| | |
|---|---|
| System | Loader arm with parallel movement |
| Standard bucket width | 2420 mm |
| Standard bucket capacity | 1.1 m³ (ISO 7546) |
| Standard bucket weight | 458 kg |
| Lifting capacity | |
| at max. height | 3825 daN (3900 kg) |
| at ground level (ISO 14397) | 5200 daN (5300 kg) |
| Breakout force (ISO 14397) | 6375 daN (6500 kg) |
| 4×1 bucket width | 2440 mm |
| 4×1 bucket capacity | 1.03 m³ (ISO 7546) |

# Dimensions

## Machine dimensions

| | | |
|---|---|---|
| A | Max. height | 4305 mm |
| B | Pin height | 3475 mm |
| BB | Forks loading max. height | 3145 mm |
| C | Cab height | 2950 mm |
| D | Max. dumping height | 2825 mm |
| E | Max. dumping reach (45°) | 645 mm |
| F | Dumping angle | 42° |
| G | Rollback angle | 45° |
| H | Digging depth | 200 mm |
| I | Bucket reach (edge) | 2105 mm |
| J | Ground clearance | 410 mm |
| K | Wheel base | 2215 mm |
| L | Backhoe swing centre distance | 1325 mm |
| M | Transport length | 5965 mm |
| N | Dumping height SAE | 3920 mm |
| | Max. dumping height | 4270 mm |
| | - with extended telescopic SAE | 4610 mm |
| | - with extended telescopic max. | 4995 mm |

| | | |
|---|---|---|
| O | Max. digging height | 5895 mm |
| | - with extended telescopic | 6520 mm |
| P | Digging depth SAE | 4225 mm |
| | - with extended telescopic | 5335 mm |
| Q | Reach at max. height | 2830 mm |
| | - with extended telescopic | 3875 mm |
| R | Max. reach from swing centre | 5750 mm |
| | - with extended telescopic | 6760 mm |
| S | Max. digging depth | 4825 mm |
| | - with telescopic | 5780 mm |
| T | Digging reach | 2330 mm |
| U | Rear tread | 1950 mm |
| V | Front tread | 1950 mm |
| W | Overall width (with bucket) | 2440 mm |
| X | Transport hoe height | 3835 mm |
| | - with telescopic | 3980 mm |

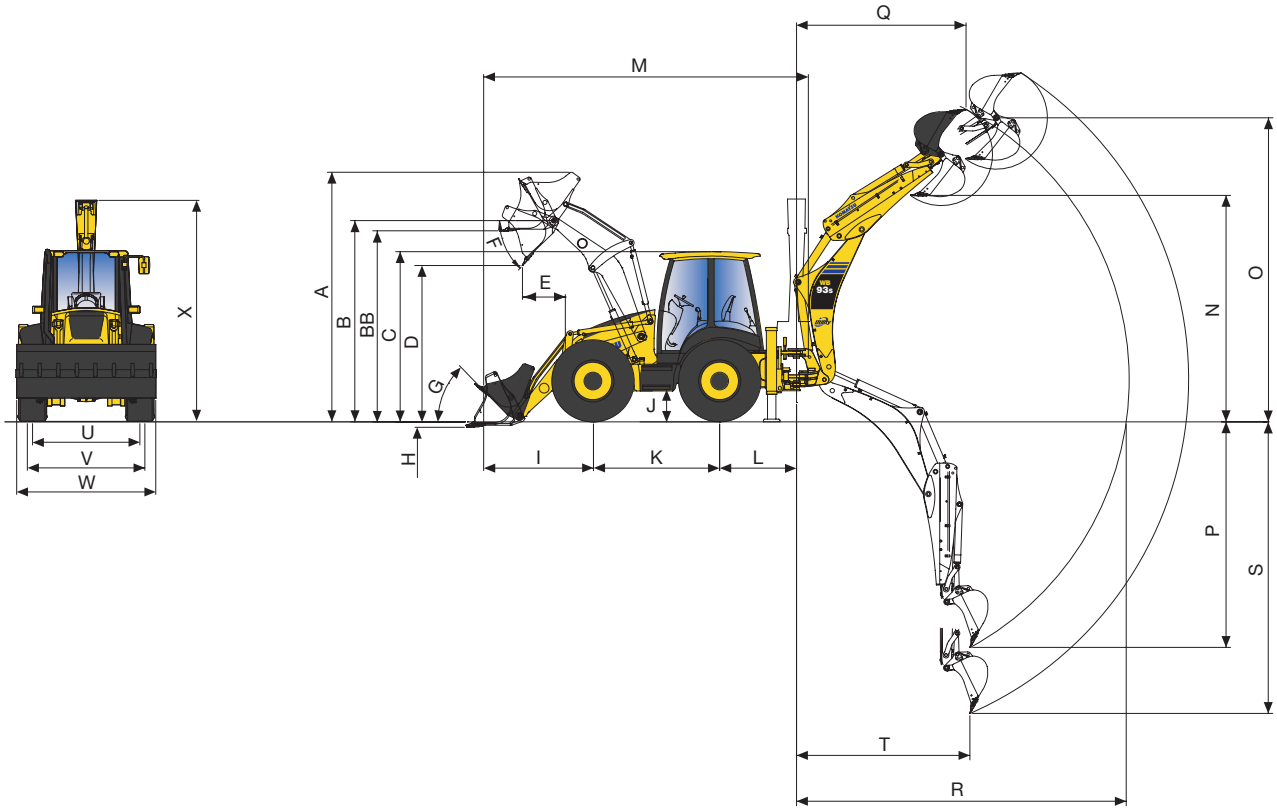


When used in object handling operations, the backhoe portion must be equipped with hose burst valves (boom, arm and overload warning device) in compliance with EN474-4 and must operate in accordance with the related local regulations.

WB
93S
KOMATSU

# Standard and optional equipment

### Engine

| | |
|---|---|
| Komatsu SAA4D102SE-1 water-cooled, 4-cycle direct injection diesel engine | ● |
| EU Stage V compliant | ● |
| Dry type air cleaner with clogging indicator | ● |
| Fuel control dial | ● |
| Alternator 12 V / 120 A | ● |
| Starter motor 12 V / 4.2 kW | ● |
| Battery 12 V / 110 Ah | ● |
| Hyper vent switch for engine cooling fan | ● |
| Air pre-cleaner, cyclone type | ○ |

### Hydraulic system

| | |
|---|---|
| 2-working mode selection system; power mode, economy mode and Speed-up function for loader | ● |
| PPC control lever for loader arm and bucket, with floating and "Return-To-Dig" function, front attachment control, transmission declutch control | ● |
| Hydraulic line for hammer till the arm end | ● |
| 2-way auxiliary line (HCU-A) for backhoe | ○ |

### Transmission

| | |
|---|---|
| Power Shuttle transmission with 4 synchronised gears | ● |
| Limited slip differential on both axles | ● |

### Chassis and tyres

| | |
|---|---|
| 4 wheel drive | ● |
| 4 wheel steering (3 modes) with electronic alignment | ● |
| Front mudguards | ● |
| Tyres 440/80-28 Camso MPT732 | ○ |
| Tyres 440/80 R28 Michelin XMCL | ○ |
| Tyres 440/80-28 Trelleborg MPX | ○ |

### Service and maintenance

| | |
|---|---|
| Multi-function video compatible colour monitor with Equipment Management and Monitoring System (EMMS) and efficiency guidance | ● |
| Battery main switch | ● |
| Komtrax – Komatsu wireless monitoring system (4G) | ● |

### Cabin

| | |
|---|---|
| ROPS (ISO 3471:2008, SAEJ/ISO3471) and FOPS level 2 (ISO 3449), two doors, fully opening rear window, front and rear window wipers, cup holder, sun visor | ● |
| Adjustable suspension seat with seat belt | ● |
| Monitor panel 7" colour display | ● |
| 4WS user friendly guidance system | ● |
| 12 Volt power supply | ● |
| Beverage holder and magazine rack | ● |
| Internal storage compartments (one lockable) | ● |
| Adjustable steering column | ● |
| Hydraulically assisted brake system (power brakes) | ● |
| Air conditioning | ○ |
| DAB+ digital radio | ○ |

### Safety equipment

| | |
|---|---|
| Travel acoustic alarm | ● |
| Electric horn | ● |
| Rear-view mirrors (left and right side, right rear) | ● |
| Hose burst valves on backhoe boom/arm cylinders, and stabilizers | ● |
| Overload warning device | ● |
| Emergency engine stop switch | ● |
| Seat belt caution indicator | ● |
| Rotating beacon | ● |
| Hose burst valves on loader arm cylinders with deactivation switch | ○ |

### Lighting system

| | |
|---|---|
| Working lights on cab (2 front/2 rear) | ● |
| LED working lights on cab (4 front/4 rear) | ○ |

### Other equipment

| | |
|---|---|
| Standard colour scheme and decals | ● |
| Parts book and operator manual | ● |
| Hydraulic hand hammer circuit | ○ |
| Additional front counterweights (170 kg, 370 kg) | ○ |
| Rubber pads for stabilisers | ○ |
| Biodegradable hydraulic oil | ○ |
| Special waxing | ○ |
| TÜV + TBG version (40 km/h) | ○ |
| Tool box | ○ |
| Low-maintenance radiator mesh | ○ |

## Loader equipment

| | |
|---|---|
| PPC servo-controls | ● |
| Speed-up function | ● |
| Heavy-duty safety bar | ● |
| Self-levelling | ● |
| Floating function | ● |
| LSS (Load Stabiliser System) | ○ |

## Loader attachments

| | |
|---|---|
| General purpose bucket w. teeth (1.1 $m^3$) | ○ |
| 4×1 bucket with pre-setting for flip-over forks and angle opening indicator (1.03 $m^3$) | ○ |
| Heavy-duty 4×1 bucket (1.03 $m^3$) | ○ |
| Bolt-on cutting edge | ○ |
| Cutting edge on teeth | ○ |
| Flip-over forks on 4×1 bucket | ○ |
| Forks (for quick-coupler) | ○ |
| Mechanical quick-coupler | ○ |
| Hydraulic quick-coupler (ISO 23727:2009) | ○ |
| Angle dozer blade (for quick-coupler) | ○ |
| Lifting hook bolted on upper side of 4×1 loader bucket, for object handling | ○ |

## Backhoe equipment

| | |
|---|---|
| Mechanical control levers | ● |
| Electro-hydraulic backhoe boom lock | ● |
| Backhoe swing transport lock | ● |
| Electro-hydraulic backhoe slide frame release lock | ● |
| PPC servo-controls for stabilisers | ● |
| Hydraulic cushions | ● |
| PPC servo-controls (Backhoe equipment) | ○ |
| Hydraulic backhoe side shift | ○ |
| Telescopic arm | ○ |
| 2-way circuit for attachments (auger, tilting bucket) | ○ |
| Alternative control pattern ISO/SAE | ○ |
| Mechanical quick-couplers (Lehnhoff) | ○ |

## Backhoe attachments

| | |
|---|---|
| Bucket range (300 - 800 mm) (only direct mount) | ○ |
| Ditch cleaning bucket (1400 mm) (only direct mount) | ○ |
| Bucket linkage with lifting hook | ○ |

Further equipment on request

● standard equipment
○ optional equipment

A wide range of buckets and attachments is available. Your Komatsu distributor is ready to assist you with the selection of suitable options.

This specification sheet may contain attachments and optional equipment that are not available in your area.
Please consult your local Komatsu distributor for those items you may require.
Materials and specifications are subject to change without notice.

Your Komatsu partner:

komatsu.eu

© 2026 Komatsu Europe International N.V. All rights reserved. Printed in Europe. WENSS10000-04 10/2026