WB97R-8

Rigid backhoe loader

Engine power
75.0 kW / 101 HP @ 2300 rpm

Operating weight
7745 - 9500 kg

Bucket capacity
1.03 m^3 (4×1 bucket)

WB97R-8

Engine power
75.0 kW / 101 HP @ 2300 rpm

Operating weight
7745 - 9500 kg

Bucket capacity
1.03 m³
(4×1 bucket)

A user-friendly machine with

top class performance

Powerful and environmentally friendly

- EU Stage V engine
- Increased engine displacement
- Viscous fan clutch
- Monitoring system with Eco gauge
- Power and Eco mode improve fuel efficiency
- Maintenance-free Diesel Particulate Filter (DPF)
- Hyper vent switch for engine cooling fan

First-class comfort

- Multi-function monitor with high resolution 7" LCD color display
- Air-suspended operator seat (Standard)
- Ergonomic switch layout for the operator console
- Dial type fuel control and electric accelerator pedal
- Hammer piping (Standard)
- Power assisted brake

Safety first

- Anti-burst valves for stabilizers, boom and arm (Standard)
- Emergency engine stop switch
- Seat belt caution indicator
- Unrivaled front visibility thanks to lateral exhaust pipe

Easy maintenance

- Easy refilling from ground level for hydraulic oil, AdBlue® and fuel
- Maintenance information displayed on the monitor
- Rear tool box

Komtrax

- Komatsu Wireless Monitoring System
- 4G mobile communications
- Increased operational data and reports

Powerful and environmentally friendly

Higher productivity

The Komatsu EU Stage V compact engine featuring state-of-the-art technology delivers the highest efficiency in a small package. The aftertreatment system combines a maintenance-free Diesel Particulate Filter (DPF) and Selective Catalytic Reduction (SCR). With ultra-low emissions, it provides a lower environmental impact and a superior performance to help reduce operating costs and lets the operator work in complete peace of mind.

Komatsu fuel-saving technology

The core of the Komatsu backhoe loader hydraulics is the Closed Load Sensing System (CLSS). Thanks to its variable flow, and together with the "Power" and "Economy" working modes, the integrated engine management, the viscous fan clutch and the eco gauge, the correct power is supplied to the machine when it is needed.

Absolute control

The 'Full Power Shift' transmission is controlled by a twist grip lever, with automatic gear shifting as standard. A 'kick-down' function is also fitted as standard, allowing sequential shifting from 2nd gear to 1st by just pressing a switch. An automatic "Speed-up" function during loader operations easily releases the full hydraulic power of the WB97R-8.

First-class comfort

Operator's environment

The new acoustically-optimised cabin minimises noise spikes when working to help you maintain high concentration and awareness. PPC servo-controls are standard for the front loader and backhoe. The dial type fuel control simplifies operation and engine speed adjustment. Air-suspended operator seat is standard, and switch layout for the operator console has a new ergonomic design. Reduced driver effort is granted by the new hydraulically assisted brake system.

New multi-function monitor with more information

A high-definition 7" LCD monitor provides excellent visibility. The high-definition LCD panel is less affected by the viewing angle and surrounding brightness, ensuring excellent visibility. Various alerts and machine information are displayed in a simple format. Useful information such as operation records, machine setting and maintenance data are also provided. The operator can easily navigate through screen pages with intuitive side buttons.

Convenient, ergonomic and precise control

7" multi-function monitor

Maximized efficiency

Loader

The front loader design ensures optimal parallel lifting; in addition, the divergent shape of the arm greatly improves visibility and provides excellent loading performance. The design of the backhoe features a clean and functional layout, with hydraulic piping and hoses along the boom. PPC servo-control is standard for the front loader.

S-shape backhoe

The rounded shape of the backhoe enhances the loading ability of the machine and its capacity to overcome obstacles, while ensuring a high breakout force. The telescopic arm significantly increases the machine's versatility.

Custom made

Several different configurations make this machine suitable for a wide variety of customers. The many options offer a high level of customisation: hydraulic side shift for the backhoe, LSS (Load Stabilizer System), radial tyres and quick-couplers are just a few.

Safety first

Unrivaled all round view

The wide round glass surface presents a highly increased visibility. The bonnet shape, the lateral exhaust pipe and the upper front window make it easy and safe to work with the front loader. When operating the backhoe excavator, the operator can easily open the single frame window and comfortably overlook the surrounding area.

Optimal jobsite safety

Safety features on the Komatsu WB97R-8 comply with the latest industry standards and work in synergy to minimise risks to people in and around the machine. Anti-burst valves are now included for backhoe operations and on stabilizers. A new "Engine shutdown" secondary switch, reachable from ground level, and a new optical seat belt alarm complete Komatsu's traditionally safe operator environment.

Secondary engine shut down switch

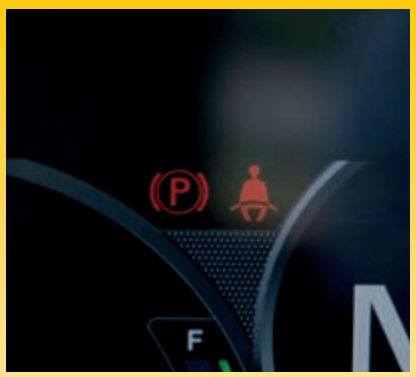

Seat belt caution

Anti-burst valves for stabilizers, boom and arm (Standard)

Easy maintenance

Excellent serviceability

Komatsu designed the WB97R-8 with an easy access to all service points. Routine maintenance and servicing are less likely to be skipped, which can mean a reduction of costly downtime later on. The radiator, aftercooler and oil cooler are made of aluminium to improve their efficiency and are mounted in parallel for quicker cleaning.

Flexible warranty

When you purchase Komatsu equipment, you gain access to a broad range of programmes and services that have been designed to help you get the most from your investment. For example, Komatsu's Flexible Warranty Programme provides a range of extended warranty options on the machine and its components. These can be chosen to meet your individual needs and activities. This programme is designed to help reduce total operating costs.

AdBlue®, fuel and hydraulic oil tank are easily accessible on the machine side and refilled by ground level, ensuring a fatigue less operation

Daily maintenance is enhanced thanks to the double position front opening and the check point position easily accessible on the left side

Maintenance information displayed on the monitor

Information & communication technology

The way to higher productivity

Komtrax uses the latest wireless monitoring technology. Compatible on PC, smartphone or tablet, it delivers insightful and cost saving information about your fleet and equipment, and offers a wealth of information to facilitate peak machine performance. By creating a tightly integrated web of support it allows proactive and preventive maintenance and helps to efficiently run a business.

Knowledge

You get quick answers to basic and critical questions about your machines – what they're doing, when they did it, where they're located, how they can be used more efficiently and when they need to be serviced. Performance data is relayed by wireless communication technology (satellite, GPRS or 4G depending on model) from the machine to a computer and to the local Komatsu distributor – who's readily available for expert analysis and feedback.

Power

The detailed information that Komtrax puts at your fingertips 24 hours a day, 7 days a week gives the power to make better daily and long-term strategic decisions – at no extra cost. Problems can be anticipated, maintenance schedules customised, downtime minimised and machines kept where they belong: working on the jobsite.

Convenience

Komtrax enables convenient fleet management on the web, wherever you are. Data is analysed and packaged specifically for effortless and intuitive viewing in maps, lists, graphs and charts. You can foresee eventual maintenance issues and required spare parts, and troubleshoot a problem before Komatsu technicians arrive on site.

Specifications

WB97R-8E0

Engine

Model	Komatsu SAA4D102SE-1
Type	Common rail direct injection, water-cooled, emissionised, turbocharged, after-cooled diesel
Engine power	
at rated engine speed	2300 rpm
ISO 14396	75.0 kW / 101 HP
ISO 9249 (net engine power)	68.6 kW / 92.0 HP
No. of cylinders	4
Bore × stroke	102 × 110 mm
Displacement	3.6 ltr
Cooling fan	Viscous fan clutch
Air-filter type	Dry type air cleaner with clogging indicator
Fuel	Diesel fuel, conforming to EN590 Class 2/Grade D. Paraffinic fuel capability (HVO, GTL, BTL), conforming to EN 15940:2016

Operating weight (appr.)

Standard machine operating weight*	8320 kg
Change in data caused by:	
standard bucket	-300 kg
heavy duty bucket	+60 kg
600 mm bucket (direct mount)	-155 kg
standard arm	-230 kg
20" tyres	+70 kg
pallet fork	-590 kg
fork for 4×1 bucket	+235 kg
air conditioner	+20 kg
mech. quick-coupler (loader)	+140 kg
mech. quick-coupler (backhoe)	+80 kg

* Including 4×1 bucket, telescopic arm, 600 mm backhoe bucket and operator. Max. permitted total weight 9500 kg

Hydraulic system

System	SynchroSystem with Speed-up function for loader arm
Type	CLSS. Closed-centre system with load sensing and pressure compensation valves
No. of working modes	2 (Power / Economy)
Hydraulic pump	Variable displacement axial pistons
Max. pump flow	165 l/min
Working pressure (max.)	250 bar
Main valve	LIFD "Load Independent Flow Divider" modular type

Cab

Two-door cab in conformity with ISO 3471 with ROPS (roll over protective structure) in conformity with SAE J1040c and FOPS (falling object protective structure) in conformity with ISO 3449

Steering system

System	Front steering. Hydrostatic "Load Sensing" system with steering priority valve	
Turning radius (without using brakes)		
Tyres	18"	20"
at bucket edge (4x1 bucket)	5910 mm	6810 mm
at corner of tyres	4410 mm	5465 mm
Turning radius (using brakes)		
Tyres	18"	20"
at bucket edge (4x1 bucket)	5285 mm	5920 mm
at corner of tyres	3680 mm	4625 mm

Transmission

Electronically-controlled, four-wheel drive, "Full Power Shift" transmission. The control is automatic, with a knob used to select the direction of travel and the gears, at full power, without losing traction.

Max. travel speeds (forwards/backwards)

1. gear	6 km/h
2. gear	10 km/h
3. gear	20 km/h
4. gear	40 km/h

Chassis and tyres

Frame	Reinforced and closed box structure
Axles	Heavy-duty axles
Final drive	Planetary gear in oil bath
Front axle total oscillation angle	20°
100% differential lock in the rear axle	Electro-hydraulic, controlled from the cab
Max. front axle dynamic load rating	9177 kg
Max. front axle static load rating	22944 kg
Max. rear axle dynamic load rating	7648 kg
Max. rear axle static load rating	19120 kg
Front tyres (standard)	12.5/80-18-14 PR
Rear tyres (standard)	16.9-28-12 PR

Brakes

Oil immersed disc brakes are actuated by individual braking on each rear wheel with 2 separate pedals. Total integral braking on the 4 wheels is activated by operating the two pedals at the same time.

Parking brake (safety brake)	Caliper brake operated through a hand lever

Service refill capacities

Engine oil	8 l
Cooling system	12 l
Fuel tank	135 l
Hydraulic oil tank	41.5 l
Hydraulic system	110 l
Axle front	7.8 l
Axle rear	15 l
Hydraulic transmission	20 l
Brake system	0.8 l
AdBlue® tank	13.5 l

Environment

Engine emissions	Fully complies with EU Stage V exhaust emission regulations
Noise levels	
LwA external	103 dB(A) (2000/14/EC Stage II)
LpA operator ear	75 dB(A) (ISO 6396 dynamic test)
Vibration levels (EN 12096:1997)	
Hand/arm	≤ 2.5 m/s^2 (uncertainty K = 1.2 m/s^2)
Body	≤ 0.5 m/s^2 (uncertainty K = 0.2 m/s^2)
Contains fluorinated greenhouse gas HFC-134a (GWP 1430). Quantity of gas 1.5 kg; CO_2 equivalent 2.15 t	

Backhoe

System	Reinforced structure, casted swing support and arm ends
Boom swing angle	180°
Bucket digging force (ISO 6015)	5985 daN (6100 kg)
Arm crowd force (ISO 6015)	3925 daN (4000 kg)
Outriggers	Vertical outriggers with adjustable wear device

Loader

System	Loader arm with parallel movement
Standard bucket width	2320 mm
Standard bucket capacity	1.03 m^3 (ISO 7546)
Standard bucket weight	430 kg
Lifting capacity	
at maximum height	3825 daN (3900 kg)
at ground level (ISO 14397)	5200 daN (5300 kg)
Breakout force (ISO 14397)	6375 daN (6500 kg)
4×1 bucket width	2340 mm
4×1 bucket capacity	1.0 m^3 (ISO 7546)

Dimensions

Machine dimensions

A	Max. height	4335 mm
B	Pin height	3405 mm
	- with 20" front tyres	3450 mm
BB	Forks loading max height	3135 mm
C	Cab height	2910 mm
D	Max. dumping height	2750 mm
E	Max. dumping reach (45°)	690 mm
F	Dumping angle	43°
G	Rollback angle	42°
H	Digging depth (only for 18" front tyres)	180 mm
I	Bucket reach	2175 mm
J	Ground clearance	385 mm
K	Wheel base	2175 mm
L	Backhoe swing centre distance	1325 mm
M	Transport length	5995 mm
N	Dumping height SAE	3910 mm
	Max. dumping height	4390 mm
	- with extended telescopic SAE	4835 mm
	- with extended telescopic max.	5170 mm

O	Max. digging height	6020 mm
	- with extended telescopic	6680 mm
P	Digging depth SAE	4570 mm
	- with extended telescopic	5825 mm
Q	Reach at max. height	3045 mm
	- with extended telescopic	4240 mm
R	Max. reach from swing centre	6035 mm
	- with extended telescopic	7175 mm
S	Max. digging depth	5245 mm
	- with telescopic	6410 mm
T	Digging reach	2320 mm
U	Rear tread	1800 mm
V	Front tread	1945 mm
W	Overall width (with bucket)	2340 mm
	Overall width (with 20" front tyre)	2440 mm
X	Transport hoe height	3785 mm

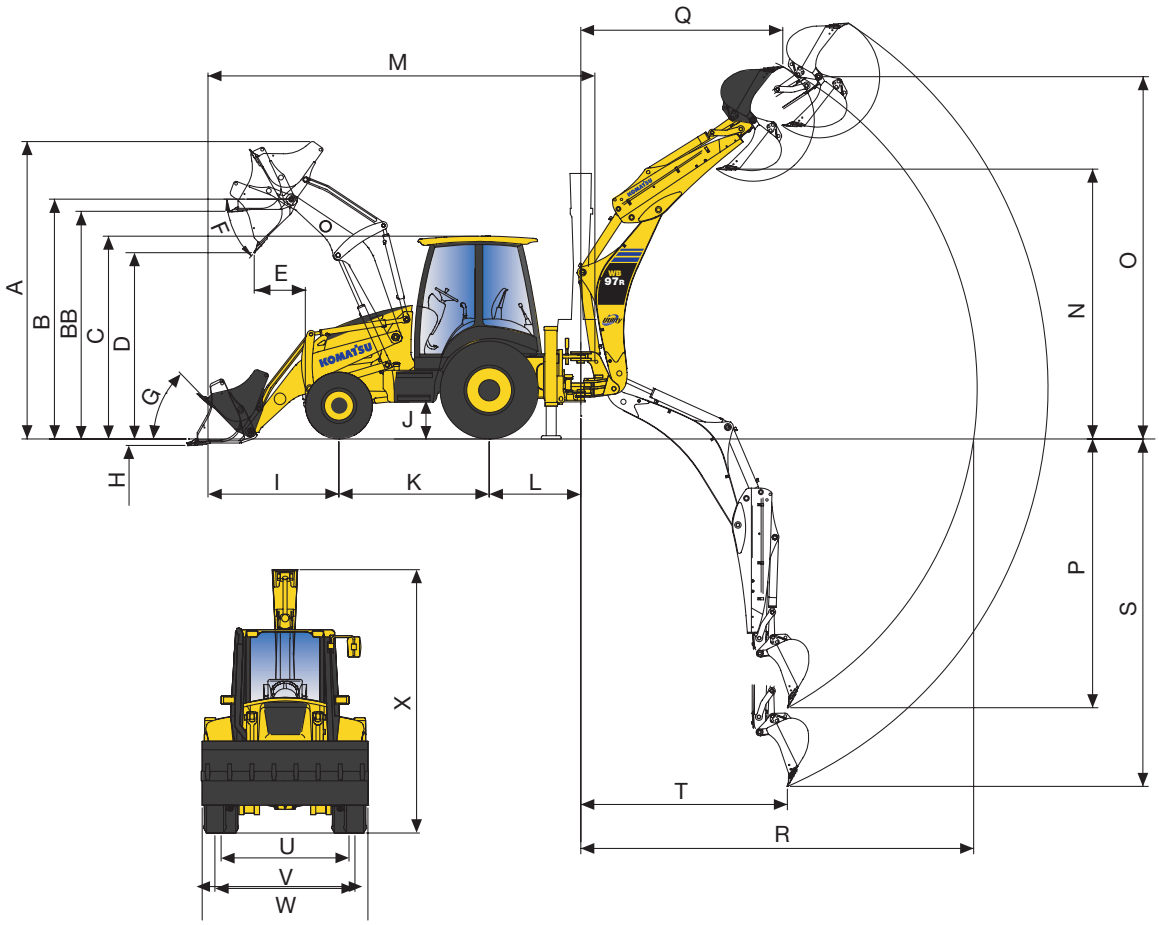

When used in object handling operations, the backhoe portion must be equipped with hose burst valves (boom, arm and overload warning device) in compliance with EN474-4 and must operate in accordance with the related local regulations.

KOMATSU
WB97R

Standard and optional equipment

Engine

Komatsu SAA4D102SE-1 water-cooled, 4-cycle direct injection diesel engine	●
EU Stage V compliant	●
Dry type air cleaner with clogging indicator	●
Fuel control dial	●
Alternator 12 V / 120 A	●
Starter motor 12 V / 4.2 kW	●
Battery 12 V / 110 Ah	●
Hyper vent switch for engine cooling fan	●
Air pre-cleaner, cyclone type	○

Hydraulic system

2-working mode selection system; power mode, economy mode and Speed-up function for loader	●
PPC control lever for loader arm and bucket, with switches for Speed-up, front attachment control, transmission declutch control, differential locking	●
Hydraulic line for hammer till the arm end	●

Transmission

Powershift transmission with 4 synchronised gears	●
Electro-hydraulic 100% differential lock	●
Drive shaft guard	○

Chassis and tyres

Front tyres 12.5/80-18-14 PR Camso SL R4	●
Rear tyres 16.9-28-12 PR Camso SL R4	●
Front mudguards	●
Front tyres 320/80-18 Camso MPT732	○
Front tyres 440/80-28 Camso MPT732	○
Front tyres 340/80-18 Trelleborg MPX	○
Front tyres 480/80-28 Trelleborg MPX	○
Front tyres 340/80 R18 Michelin XMCL	○
Front tyres 440/80 R28 Michelin XMCL	○
Front tyres 400/70-20 Trelleborg MPX	○
Front tyres 480/80-26 Trelleborg MPX	○

Service and maintenance

Multi-function video compatible colour monitor with Equipment Management and Monitoring System (EMMS) and efficiency guidance	●
Battery main switch	●
Komtrax – Komatsu wireless monitoring system (4G)	●

Cabin

ROPS (ISO 3471:2008, SAEJ/ISO3471) and FOPS (ISO 3449), two doors, fully opening rear window, front and rear window wipers, cup holder, sun visor	●
Adjustable suspension seat with seat belt	●
Monitor panel 7" colour display	●
12 Volt power supply	●
Beverage holder and magazine rack	●
Internal storage compartments (one lockable)	●
Adjustable steering column	●
Hydraulically assisted brake system (power brakes)	●
Air conditioning	○
DAB+ digital radio	○

Safety equipment

Travel acoustic alarm	●
Electric horn	●
Rear-view mirrors (left and right side, internal rear)	●
Hose burst valves on boom/arm cylinders, and stabilizers	●
Overload warning device	●
Emergency engine stop switch	●
Seat belt caution indicator	●
Rotating beacon	●
Hose burst valves on loader arm cylinders with deactivation switch	○

Lighting system

Working lights on cab (2 front/2 rear)	●
LED working lights on cab (4 front/4 rear)	○

Other equipment

Standard colour scheme and decals	●
Parts book and operator manual	●
Hydraulic hand hammer circuit	○
Additional front counterweights (170 kg, 370 kg)	○
Rubber pads for stabilisers	○
Biodegradable hydraulic oil	○
TÜV + TBG version (20 km/h or 40 km/h)	○
Special waxing	○
Tool box	○
Low-maintenance radiator mesh	○

Loader equipment

PPC servo-controls	●
Speed-up function	●
Heavy-duty safety bar	●
Self-levelling	●
Floating function	●
LSS (Load Stabiliser System)	○
Safety valve deactivation switch	○

Loader attachments

General purpose bucket w. teeth (1.03 m^3)	○
4×1 bucket with pre-setting for flip-over forks and angle opening indicator (1.00 m^3)	○
Heavy-duty 4×1 bucket (1.00 m^3)	○
Bolt-on cutting edge	○
Cutting edge on teeth	○
Flip-over forks on 4×1 bucket	○
Pallet forks (for quick-coupler)	○
Mechanical quick-coupler	○
Hydraulic quick-coupler (ISO 23727:2009)	○
Angle dozer blade (for quick-coupler)	○
Lifting hook bolted on upper side of 4×1 loader bucket, for object handling	○

Backhoe equipment

PPC servo-controls	●
Electro-hydraulic backhoe boom lock	●
Backhoe swing transport lock	●
Electro-hydraulic backhoe slide frame release lock	●
PPC servo-controls for stabilisers	●
Hydraulic cushions	●
Hydraulic backhoe side shift	○
Telescopic arm	○
2-way circuit for attachments (auger, tilting bucket)	○
Alternative control pattern ISO/SAE	○
Hydraulic and mechanical quick-couplers (Lehnhoff)	○
Hydraulic quick-coupler lines	○

A wide range of buckets and attachments is available. Your Komatsu distributor is ready to assist you with the selection of suitable options.

Backhoe attachments

Bucket range (300 - 800 mm) (only direct mount)	○
Ditch cleaning bucket (1400 mm) (only direct mount)	○
Bucket linkage with lifting hook	○

Further equipment on request

● standard equipment
○ optional equipment

This specification sheet may contain attachments and optional equipment that are not available in your area.
Please consult your local Komatsu distributor for those items you may require.
Materials and specifications are subject to change without notice.

Your Komatsu partner:

komatsu.eu

© 2026 Komatsu Europe International N.V. All rights reserved. Printed in Europe. WENSS10100-04 10/2026